#242

OGO-5

GEOCORONAL LYMAN ALPHA DATA

68-014A-22A

OGO 5

GEOCORONAL LYMAN ALPHA DATA

68-0144-22A

THIS DATA SET HAS BEEN RESTORED. ORIGINALLY IT CONTAINED 22 9-TRACK, 1600 BPI TAPES WRITTEN IN BINARY. THERE ARE SIX RESTORED TAPES. THE DR AND DS TAPES ARE 9-TRACK, 6250 BPI. THE ORIGINAL TAPES WERE CREATED ON AN IBM 360 COMPUTER. THE DR AND DS NUMBERS ALONG WITH THE CORRESPONDING D NUMBERS AND THE TIME SPANS ARE AS FOLLOWS:

DR#	DS#	D#	FILES	TIME SPAN
DR02496	DS02496	D12153	1-25	03/05/68 - 05/08/68
		D12156	26-30	05/08/68 - 05/26/68
		D12157	31-34	05/26/68 - 06/06/68
		D12151	35-38	06/06/68 - 06/16/68
		D12152	39-42	06/16/68 - 06/27/68
		D12161	43-47	06/27/68 - 07/10/68
		D12154	48-51	07/10/68 - 07/20/68
DR02497	DS02497	D12155	1-5	07/20/68 - 08/01/68
		D12152	6-14	08/02/68 - 08/25/68
		D12158	15-21	08/25/68 - 09/13/68
		D12181	22-29	09/13/68 - 10/03/68
		D12180	30-37	10/03/68 - 10/24/68
DR02498	DS02498	D12179	1-4	10/24/68 - 11/04/68 (a)
		D12178	5-13	11/09/68 - 12/02/68
		D12177	14-21	12/02/68 - 12/23/68
		D12176	22-25	12/23/68 - 12/31/68
		D12179	26-30	01/02/69 - 01/15/69 (a)
		D12175	31-38	01/15/69 - 02/05/69
DR02499	DS02499	D12174	1-8	02/05/69 - 02/26/69
		D12173	9-18	02/26/69 - 03/24/69
		D12172	19-28	03/24/69 - 04/19/69
		D12171	29-33	04/19/69 - 05/02/69
		D12170	34-41	05/02/69 - 05/23/69

(a) THIS IS NOT A MISTAKE. THIS TAPE WAS SPLIT UP IN ORDER TO KEEP THE TIME SPANS IN ORDER.

69-014A-22A

DR#	DS#	D#	FILES	TIME SPAN
DR02500	DS02500	D12169	1-10	05/23/69 - 06/18/69
		D12168	11-18	06/18/69 - 07/09/69
		D12167	19-26	07/09/69 - 07/29/69
		D12166	27-32	07/30/69 - 08/14/69
		D12165	33-43	08/14/69 - 09/12/69
DR02501	DS02501	D12164	1-10	09/12/69 - 10/08/69
		D12163	11-20	10/08/69 - 11/03/69
		D12162	21-29	11/03/69 - 11/26/69
		D12160	30-39	11/26/69 - 12/22/69
		D12150	40-43	12/22/69 - 12/31/69

DATA PROCESSING FOR LYMAN-ALPHA EXPERIMENT E-22 ON OGO-5

J.L. BERTAUX

N° 55 G 1973

May 1973

MAY 29 1973

DATA PROCESSING FOR LYMAN-ALPHA EXPERIMENT E-22 ON OGO 5

J.L. BERTAUX

I - Scientific objectives -

The scientific objective of the E-22 experiment on OGO-5 is to determine the hydrogen (H) distribution in the geocorona and its temperature, from the measurement of intensity and line shape of emerging Lyman-alpha radiation.

The instrument is a photometer with a field of view of 40' and a bandwidth of 80 Å centered at Lyman-alpha (1216 Å). A two-dimensionnal scanning allows to move the FOV axis inside a cone of 16° apex angle, with the local vertical as an axis. A hydrogen cell placed in front of the photomultiplier allows to measure the linewidth. The number of photoelectric pulses counted in a given interval of time is a measure of the intensity.

A more complete description is given in the references listed at the end of the present document.

II - Description of magnetic tapes -

All the data collected in 1968 and 1969 are contained on 32 (thirty two) magnetic tapes, 1600 BPI. Each tape is marked CNRS XX, with two digits indicating the number of the tape. They are written on a 360/65 IBM Computer, on nine tracks without label, with a floating point format.

Each tape contains a variable number of files, as indicated by the table I, and each file contains the data for a whole orbit (2.5 days). There are only 2 orbits for which there is no file : orbit 27, 28. A special Software developed by J. Pacquet allows to read sequentially all the files or any required file. A listing of the reading programm is attached to the present document, except for the software, contained in a deck of cards available at World Data Center A, GSFC Greenbelt, Maryland. The description of the Software is contained in document NASA X-613-7087 edited in March 1970 by GSFC.

Each file contains a file label, followed by a variable number of records.

Format of file label

N° of word	
1 } 2	Name of tape
3	Serial number of the file
4	Year
5	Day of beginning of orbit
6	Second of day
7	Orbit number.

Each record (of variable length) contains approximately 3 minutes of data, according to the following format. First, there are 89 words containing general information about the status of experiment at the time of measurements of the record, and spacecraft attitude and position. Then each measurement is given in number of counts per 0.432 s, together with four words indicating : the millisecond of day, the velocity of spacecraft in the direction of sight (for Doppler effect) and two angles defining the direction of sight in the Ideal Body System (see definition in Part III). The set of these five words constitutes a frame.

FORMAT OF RECORD

1	Status of Hydrogen cell (0., not operative ; 1., 2., or 3., operative at three different levels).
2	Calendar day of Year.
3	Number of frames contained in the record.
4	Indicator of Dark Current correction : data is : 0 not corrected 1 corrected with the Dark Current measurement of the record 2 corrected with the Dark Current measurement of preceding record.
5	Dark Current correction.
6	Scan flag (0, no scan of OPEP ; 1, OPEP was scanning).
7	Day change flag: 0 no change of day for this record 1 change of day for this record.
8	If word 7 is 1, number of frames corresponding to Day + 1.
9	Bit rate (1, 8 kb in real Time ; 3, 1 kb in Play back).
10	Temperature of experiment (degrees centigrades).
11	Number indicating the source of present data.
12	Serial number of the present record in the file.
13	OPEP angle of first frame of this record (degrees).

14-15	Name of input tape in EBCDIC
16	Time (in millisecond of day) corresponding to the following attitude informations, words 17 to 52.
17	Right ascension of S/C (degree)
18	Declination (degree)
19	Longitude (degree)
20	Radial distance of S/C to center of the Earth (km)
21	Height of S/C (km)
22	True anomaly (degree)
23	SES angle (Sun - Earth - S/C) (degree)
24	PSI two angles describing the position of S/C in a Geocentric
25	PHI Solar Ecliptic (GSE) System (degree)
26	ZETA angle subtended by 1 Earth Radius as seen from S/C
27	Eclipse Flag 0 no eclipse ; 1 eclipse
28	TAU Angles determing the position of North Pole in the
29	NU Ideal Body System.
30	VX
31	VY Velocity Vector in km/sec in the Geocentric Equatorial
32	VZ Inertial System (GEI).
33,34,35	Ideal Body Roll axis $\vec{X}_I = (XI_x, XI_y, XI_z)$ as a unit vector in GEI coordinates.
36,37,38	Ideal Body Pitch axis $\vec{Y}_I = (YI_x, YI_y, YI_z)$ as a unit vector in GEI coordinates.

39,40,41	Ideal Body Yaw axis $\vec{Z}_I$ = (ZI_x, ZI_y, ZI_z) as a unit vector in GEI coordinates (also, local vertical oriented down wards)
42 to 50	Actuel Body matrix (same three vectors as above, but true orientation instead of ideal orientation).
51	Flag generated by Attitude Orbit Tape
52	RCE angle determine the position of S/C in the GSE system (see figure 3).
53	Calibration factor : number of counts for an intensity of one kilo Rayleigh.
54, 55	0
56 to 95	Same signification as words 16 to 52 but for one minute later.
N times (N is word n°3) 100	Millisecond of day : INTEGER
101	Measured intensity in number of counts per 0.432s counting time
102	Velocity of S/C in the direction of sight
103	α Angle between direction of sight and local vertical $\vec{ZI}$
104	ψe Angle between vertical plane containing the direction of sight and plane $(\vec{XI}, \vec{ZI})$ (see figure 2).
	Millisecond of day.

III - Data processing -

The measurements contained in the tapes have only been corrected from the radiation induced noise and from stray light generated by the cell when this one is operative. This noise is measured once per record when a shutter is closed ; the measurement is contained in word n° 5.

The calibration factor (word n° 53) is a decreasing function of time. It was determined from comparison with other UV instrumentation (E-21 on OGO-5 and stellar observations of OAO-3).

The direction of sight is given by the two angles α and ψe in the Ideal Body System : ZI is pointed towards the nadir, XI is perpendicular to the Sun direction (figures 1 and 2).

Angles defining the position of S/C in the Geocentric Ecliptic System are indicated in figure 2.

For more information, please report to the publications or enter in contact with : J.L. Bertaux, Service d'Aéronomie du CNRS, 91370 Verrières le Buisson, France. - Telephone 920 10 60 -

TABLE I

Name of Tape	Number of files	Orbits	Covered Period (days)	Year
CNRS 01	25	1 to 25	65 - 129	1968
CNRS 02	5	26 & 29 to 32	130 - 148	1968
CNRS 03	4	33 to 36	149 - 158	1968
CNRS 04	4	37 to 40	159 - 168	1968
CNRS 05	4	41 to 44	169 - 179	1968
CNRS 06	5	45 to 49	180 - 191	1968
CNRS 07	4	50 to 53	192 - 202	1968
CNRS 08	5	54 to 58	203 - 215	1968
CNRS 09	9	59 to 67	215 - 238	1968
CNRS 10	7	68 to 74	239 - 257	1968
CNRS 11	8	75 to 82	257 - 275	1968
CNRS 12	8	83 to 90	275 - 296	1968
CNRS 13	6	91 to 96	296 - 314	1968
CNRS 14	9	97 to 105	314 - 337	1968
CNRS 15	8	106 to 113	338 - 358	1968
CNRS 16	9	114 to 122	359 - 015	1968-1969
CNRS 17	8	123 to 130	015 - 036	1969
CNRS 18	8	131 to 138	37 - 57	1969
CNRS 19	10	139 to 148	57 - 83	1969
CNRS 20	10	149 to 158	83 - 109	1969
CNRS 21	5	159 to 163	110 - 122	1969
CNRS 22	8	164 to 171	123 - 133	1969
CNRS 23	10	172 to 181	133 - 159	1969
CNRS 24	8	182 to 189	159 - 180	1969
CNRS 25	8	190 to 197	181 - 192	1969
CNRS 26	6	198 to 203	192 - 207	1969
CNRS 27	11	204 to 214	207 - 255	1969
CNRS 28	10	215 to 224	255 - 381	1969
CNRS 29	10	225 to 234	382 - 308	1969
CNRS 30	9	235 to 243	309 - 331	1969
CNRS 31	10	244 to 253	331 - 353	1969
CNRS 32	4	254 to 257	353 - 355	1969

REFERENCES

1. Bertaux, J.L., and J.E. Blamont, Ogo 5 measurements of Lyman alpha intensity distribution and line width up to 6 earth radii. Space Res., 10, 591, 1970.

2. Bertaux, J.L., and J.E. Blamont, Evidence for a source of an extraterrestrial hydrogen Lyman alpha emission : the interstellar wind. Astron. Astrophys. 11, 200, 1971.

3. Bertaux, J.L., A. Ammar and J.E. Blamont, OGO-5 determination of the local interstellar wind parameters. Space Research XII, 1559, 1972.

4. Bertaux, J.L., and J.E. Blamont, Interpretation of OGO-5 Lyman alpha measurements in the upper geocorona. Journal of Geophysical Research, 1973, 78, 80.

5. Bertaux, J.L., J.E. Blamont and M. Festou, Interpretation of hydrogen Lyman alpha observations of comets Bennett and Encke. To be published in Astronomy and Astrophysics, 1973.

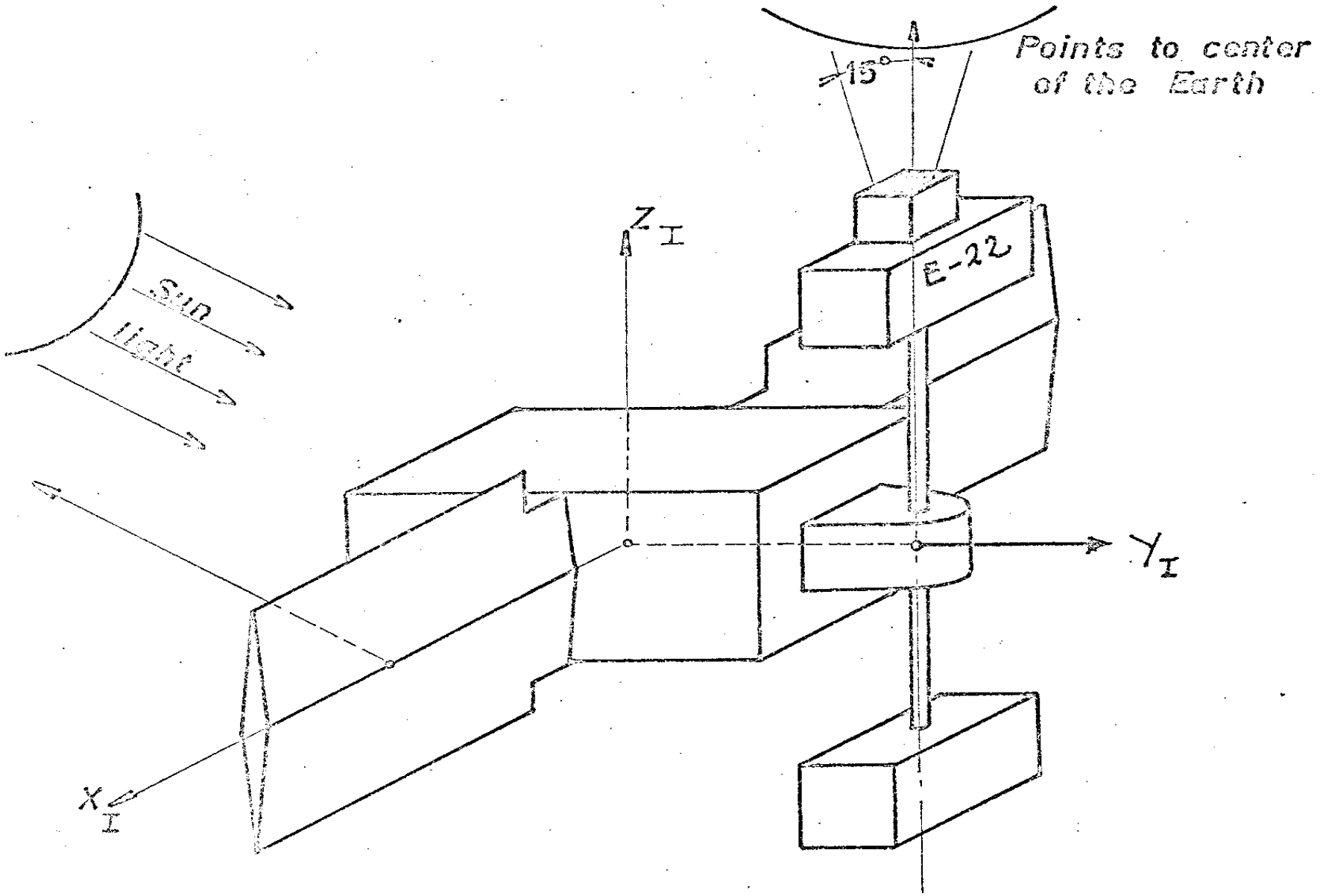

Fig 1 OGO orientation (Ideal Body System)

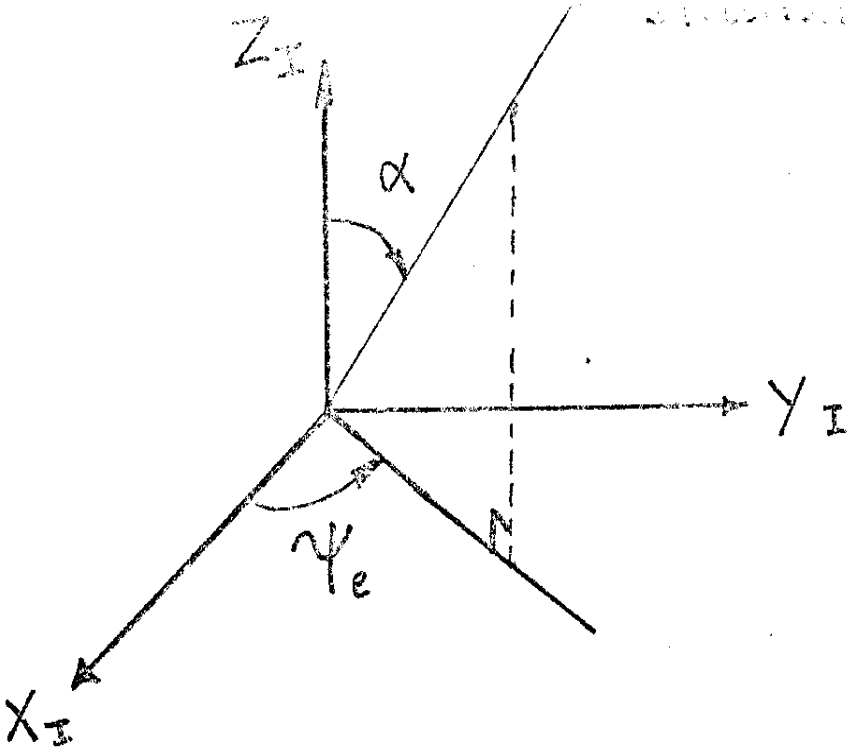

Fig 2.

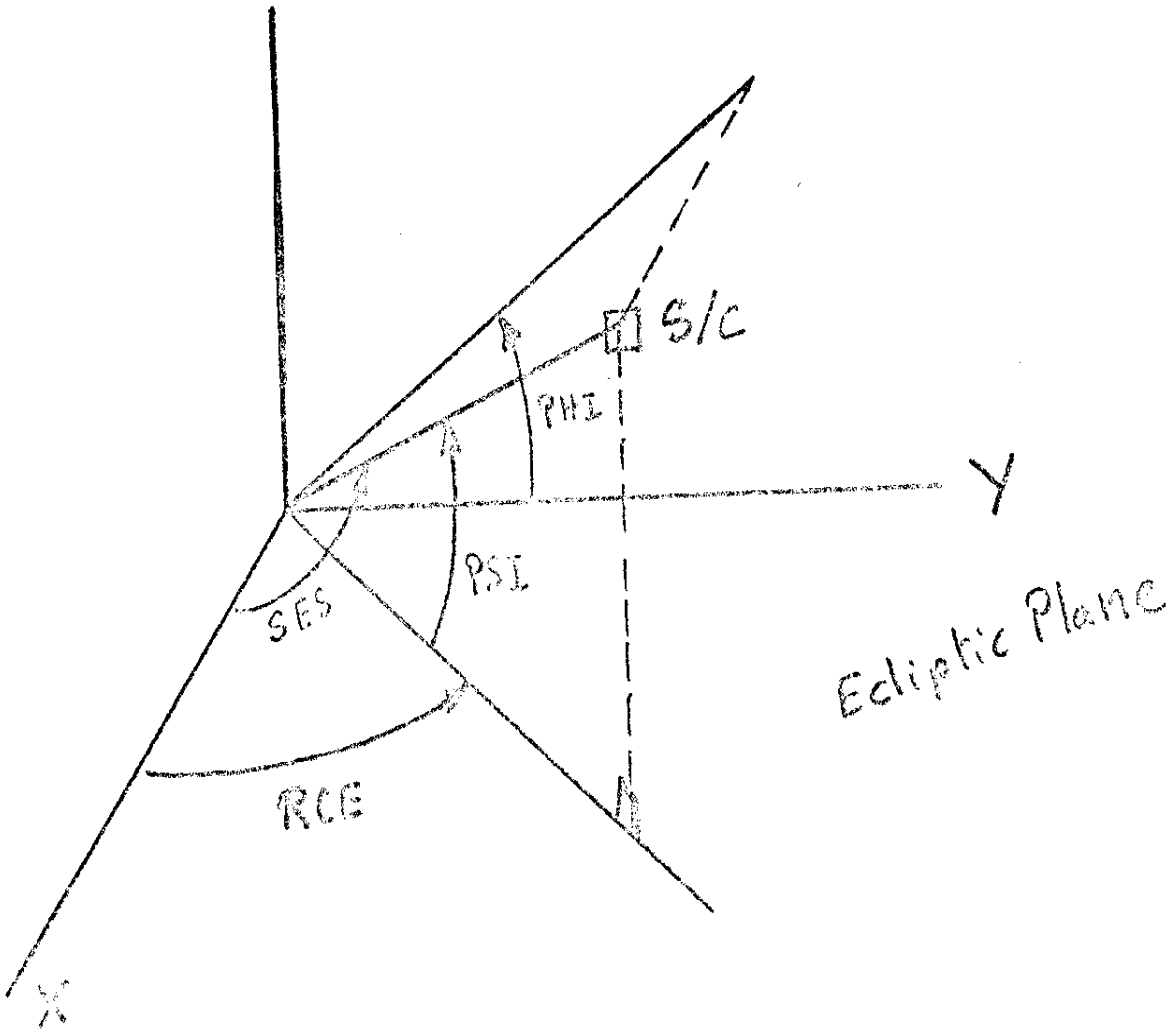

FILE NO. 1 RECORD NO. 1 LENGTH= 10000

27100000	00540000	C3D5D9E2	F3F24040	00000001	000007B1	00000164	0000E341
000000FE	00000000	00000000	00000000	00000000	00000000	00000000	00000000
00000000	00000000	00000000	00000000	00000000	00000000	0C800000	00000000
43164000	428C0000	41100000	441D02AA	00000000	00000000	00000000	41300000
41500000	45153F70	41100000	C2B20A2B	C4D7C5F0	F2F14040	47378FA2	42859965
41180DCD	429FCFE2	44516194	4438776F	421491CE	428506F0	C1F4DE2A	C29ED5A7
421100FE	00000000	4294AD09	421120C5	C1336E90	C1200370	4145A2E1	405C6C51
405FEEF9	C0DA9C65	40A0C6BF	4094478C	40850ABC	40B07AB1	C0B9539E	BF6B762B
405C6C51	405FEEF9	C0DA9C65	40A0C6BF	4094478C	40850ABC	40B07AB1	C0B9539E
BF6B762B	423F0000	C28706A1	421BA47C	00000000	00000000	47379E48	4286358A
412374DC	42A02C09	445197A1	4438AD81	4215818F	4284DEBD	C1E726EA	C2A01916
4210F660	00000000	42958449	42112420	C132D283	C120A592	41459B92	40572317
4060AAE0	C0DC7363	40A1A2FD	40963BC5	4081C45D	40B25F55	C0B75C72	BF9E61B2
40572317	4060AAE0	C0DC7363	40A1A2FD	40963BC5	4081C45D	40B25F55	C0B75C72
BF9E61B2	423F0000	C286A1C2	00000000	00000000	00000000	00000000	00000000
00000000	00000000	0377B8AE	42D6AB00	C0EADD6A	4147D958	425E6E0D	0377BD2E
42C6AB00	C0E75CD4	41375661	425F7719	0377C1AE	42E6AB00	C0E3CA30	412665E8
426149D4	0377C62E	4286AB00	C0E025CB	4113F608	42655695	0377CAAE	42C6AB00
C0DC6FEC	00000000	42755DF9	0377CF2E	42A6AB00	C0D8A8D4	00000000	42EA020B
0377D3AE	4310EAB0	C0D4D0E4	40F970EF	43102A1E	0377D82E	42E6AB00	C0D0E84F
4122DCB5	43107972	0377DCAE	43106AB0	C0CCEF77	4133F550	43109ABC	0377E12E
42BEAB00	C0C8E6AD	41448724	4310AD03	0377E5AE	42DEAB00	C0C4CE21	4154E122
4310B88F	0377EA2E	42F6AB00	C0C0A656	41651E56	4310C084	0377EEAE	43156A30
C0BC6F71	41754ACB	4310C656	0377F32E	4312EAB0	C0B829EB	41856CAE	4310CAC8
0377F7AE	42E6AB00	C0B3D60A	41958759	4310CE49	0377FC2E	43166AB0	C0AF7406
41A59CCF	4310D120	037800AE	43126AB0	C0AB046F	41B5AE86	4310D378	0378052E
42DEAB00	C0A68771	41C5BD5B	4310D571	037809AE	43106AB0	C0A1FD84	41D5CA02
4310D71F	03780E2E	4316EAB0	C09D66F3	41E5D4F4	4310D893	037812AE	4311EA30
C098C41B	41F5DE8D	4310D9D8	0378172E	431B6AB0	C094154B	42105E6F	4310DAF6
03781BAE	43156AB0	C08F5B0D	42115EE6	4310DBF3	0378202E	43176AB0	C08A9583
42125F51	4310DCD6	0378442E	43156AB0	C0AF7406	41A59CCF	4310D120	037848AE
43156AB0	C0B3D60A	41958759	4310CE49	03784D2E	42FEAB00	C0B829EB	41856CAE
4310CAC8	037851AE	42EEAB00	C0BC6F71	41754ACB	4310C656	0378562E	42D6AB00
C0C0A656	41651E56	4310C084	03785AAE	43106AB0	C0C4CE21	4154E122	4310B88F
03785F2E	43116AB0	C0C8E6AD	41448724	4310AD03	037863AE	42CEAB00	C0CCEF77
4133F550	43109ABC	0378682E	42EEAB00	C0D0E84F	4122DCB5	43107972	03786CAE
4314EAB0	C0D4D0E4	40F970EF	43102A1E	0378712E	42BEAB00	C0D8A8D4	00000000
42EA020B	037875AE	42F6AB00	C0DC6FEC	00000000	42755DF9	03787A2E	42E6AB00
C0E025CB	4113F608	42655695	03787EAE	43126AB0	C0E3CA30	412665E8	426149D4
0378832E	42BEAB00	C0E75CD4	41375661	425F7719	037887AE	42CEAB00	C0EADD6A
4147D958	425E6E0D	03788C2E	42F6AB00	C0EE4BAD	41582C2C	425DC333	037890AE
428EAB00	C0F2F619	416860E7	425CD8C8	0378952E	428EAB00	C0F4F03B	41788F35
425CF3CF	037899AE	42AEAB00	C0F825F8	4188AF5B	425CB014	03789E2E	42CEAB00
C0FD1B53	4198C4E7	425C0B89	0378A2AE	42B6AB00	C0FE572F	41A8DD4E	425C4EAD
0378A72E	42A6AB00	C1101522	4188EE6F	425C2A73	0378ABAE	42C6AB00	C1104390
41C8FCD8	425C0BE6	0378B02E	426EAB00	C1101522	4188EE6F	425C2A73	0378B4AE
42D6AB00	C0FE572F	41A8DD4E	425C4EAD	0378B92E	429EAB00	C0FB4865	4198C8CB
425C7A59	0378BDAE	4296AB00	C0F825F8	4188AF5B	425CB014	0378C22E	4276AB00
C0F4F03B	41788F35	425CF3CF	0378C6AE	4286AB00	C0F1A761	41686536	425D4BE1
0378CB2E	42A6AB00	C0EE4BAD	41582C2C	425DC333	0378CFAE	42BEAB00	C0EADD6A
4147D958	425E6E0D	0378D42E	42C6AB00	C0E75CD4	41375661	425F7719	0378D8AE
42DEAB00	C0E3CA30	412665E8	426149D4	0378DD2E	43106AB0	C0E025CB	4113F608
42655695	0378E1AE	4311EAB0	C0DC6FEC	00000000	42755DF9	0378E62E	4286AB00
C0D8A8D4	00000000	42EA020B	0378EAAE	429EAB00	C0D4D0E4	40F970EF	43102A1E
0378EF2E	42D6AB00	C0D0E84F	4122DCB5	43107972	0378F3AE	42CEAB00	C0CCEF77
4133F550	43109ABC	0378F82E	4286AB00	C0C8E6AD	41448724	4310AD03	0378FCAE
42EEAB00	C0C4CE21	4154E122	4310B88F	0379012E	42C6AB00	C0C0A656	41651E56
4310C084	037905AE	42CEAB00	C0BC6F71	41754ACB	4310C656	03790A2E	4286AB00
C0B829EB	41856CAE	4310CAC8	03790EAE	4315EAB0	C0B3D60A	41958759	4310CE49
0379132E	4311EAB0	C0ADCF55	41A59F29	4310CB54	037917AE	4296AB00	C0AB046F
41B5AE86	4310D378	037932AE	4313EAB0	C08F5B0D	42115EE6	4310DBF3	0379372E
4316EAB0	C08A9583	42125F51	4310DCD6	03793BAE	4319EAB0	C08F5B0D	42115EE6
4310DBF3	0379402E	4315EAB0	C094154B	42105E6F	4310DAF6	037944AE	43166A30
C098C41B	41F5DE8D	4310D9D8	0379A92E	425EAB00	C09D66F3	41E5D4F4	4310D893

DUPE OF D-12150
START 12/22/69
STOP 12/31/69

ORBITS
254 TO 257

[illegible]	[illegible]	[illegible]	[illegible]	[illegible]	[illegible]	[illegible]	[illegible]
43160733	044AA2D4	422B2AAA	40242824	41393217	42C2A4BD	044AA514	42282AAA
402262CC	413139E5	42C53C91	044AA754	42292AAA	40209CC7	41294586	42C8B4CE
044AA994	42212AAA	401ED61F	412156A7	42CD8B1C	044AABD4	42122AAA	401D0EDD
411972D1	42D49F5B	044AAE14	421A2AAA	401B470A	4111A78A	42DF8132	044AB054
42182AAA	40197EAF	40A2ED02	42F0884B	044AB294	42222AAA	4017B5D4	405220FE
431088E2	044AB4D4	42142AAA	4015E085	40879B17	43121A12	044AB714	421B2AAA
401422C6	40FBE598	4313460B	044AB954	42122AAA	401258A3	41177EDB	4314076C
044ABB94	42142AAA	40108E25	411F5E63	43148415	044ABDD4	42212AAA	3FEC3530
41274B67	4314D842	044AEAD4	42712AAA	3E656400	41671D1A	4315C047	044AED14
428C2AAA	3F231880	415F1F6F	4315B38B	044AEF54	42992AAA	3F3FDA00	4157223E
4315A490	044AF194	429A2AAA	3F5C9A40	414F25C8	43159280	044AF3D4	42DB2AAA
3F7958C0	414729F6	43157D02	044AF614	431202AA	3F9614C0	413F2F05	43156232
044AF854	4313B2AA	3FB2CE00	413735E1	4315403D	044AFA94	4318C2AA	3FCF83B0
412F3EF4	431513FD	044AFCD4	432162AA	3FEC3530	41274B67	4314D842	044AFF14
4321A2AA	40108E25	411F5E63	43148415	044B0154	431F42AA	401258A3	41177EDB
4314076C	044B0394	432122AA	401422C6	40FBE598	4313460B	044B05D4	432102AA
4015EC85	40879B17	43121A12	044B0814	431FC2AA	4017B5D4	405220FE	431088E2
044B0A54	431D82AA	40197EAF	40A2ED02	42F0884B	044B0C94	431F42AA	401B470A
4111A78A	42DF8132	044B0ED4	431F72AA	401D0EDD	411972D1	42D49F5B	044B1114
431E32AA	401ED61F	412156A7	42CD8B1C	044B1354	431DA2AA	40209CC7	41294586
42C884CE	044B1594	431652AA	402262CC	413139E5	42C53C91	044B17D4	4314C2AA
40242824	41393217	42C2A4BD	044B1A14	42FC2AAA	4025ECC9	41412B90	42C0A3AE
044B1C54	42E52AAA	4027B0B1	41492692	42BF0C22	044B1E94	42B92AAA	402973D2
415122C9	42BDC104	044B20D4	42A52AAA	402B3626	41591F6E	42BCAEE0	044B2314
42972AAA	402CF7A0	41611CD1	42BBC852	044B2554	42892AAA	402EB83C	41691A8A
428B03C2	044B2794	42772AAA	403077ED	4171186E	42BA5A3C	044B29D4	427C2AAA
403236AC	417916B2	42B9C68C	044B2C14	42612AAA	4033F470	41811542	42B944B9
044B2E54	42632AAA	4035B134	418913F6	42B8D1BA	044B3094	42592AAA	40376CE8
419112C6	42B86B23	044B32D4	42562AAA	4039278B	419911C1	42B80F0D	044B3514
42362AAA	403AE110	41A110BD	42B7BBEF	044B3754	42482AAA	403C996B	41A90FDC
42B77082	044B3994	42382AAA	403E509C	41B10F09	42B72BC5	044B3BD4	42372AAA
40400695	41B90E45	42B6ECDE	044B3E14	42392AAA	4041BB4D	41C10DB3	42B6B30D
044B4054	422D2AAA	40436EC0	41C90D0B	42B67DBE	044B4294	422F2AAA	404520DF
41D10C87	42B64C6C	044B44D4	422F2AAA	4046D1A8	41D90BFC	42B61EA7	044B4714
42342AAA	404520DF	41D10C87	42B64C6C	044B4954	42402AAA	40436EC0	41C90D0B
42B67DBE	044B4B94	422E2AAA	4041BB4D	41C10DB3	42B6B30D	044B4DD4	42462AAA
40400695	41B90E45	42B6ECDE	044B5014	42452AAA	403E509C	41B10F09	42B72BC5
044B5254	42452AAA	403C996B	41A90FDC	42B77082	044B5494	423B2AAA	403AE110
41A110BD	42B7BBEF	044B56D4	42492AAA	4039278B	419911C1	42B80F0D	044B5914
42612AAA	40376CE8	419112C6	42B86B23	044B5B54	425F2AAA	4035B134	418913F6
42B8D1BA	044B5D94	425E2AAA	4033F470	41811542	42B944B9	044B5FD4	42702AAA
403236AC	417916B2	42B9C68C	044B6214	42792AAA	403077ED	4171186E	42BA5A3C
044B6454	42892AAA	402EB83C	41691A8A	428B03C2	044B6694	42902AAA	402CF7A0
41611CD1	42BBC852	044B68D4	42972AAA	402B3626	41591F6E	42BCAEE0	09140100
41100000	4316D000	42C60000	41100000	41224924	00000000	00000000	00000000
41100000	41400000	45140730	43132000	C25B2645	C4D9C5F0	F3F64040	4744B8C6
4312D6EA	41C545B6	C262E282	4521F344	45206482	42B60C4D	422B88E1	421FD6F3
4235F644	4129F872	00000000	423C4E1C	4129697D	4082CBF2	4040B0B3	C0A5C2C3
C0CBDECE	C05CDCF6	407BE473	405371D2	406AA6C8	40D94086	C0826C03	40D56567
C036AA25	C0CBDECE	C05CDCF6	407BE473	405371D2	406AA6C8	40D94086	C0826C03
40D56567	C036AA25	423F0000	421ADBF6	421AFE1D	00000000	00000000	4744C76C
4312D724	41C5048D	C2631F02	4521F2EF	4520645C	42B611BE	422BB703	421FD220
4235EE91	4129F8DA	00000000	423C479A	41296A63	4082A2AD	4040F443	C0A5D416
C0CBCABD	C05CE569	407BFF1F	40538A40	406AA98D	40D935C6	C0827B8C	40D56057
C036985F	C0CBCABD	C05CE569	407BFF1F	40538A40	406AA98D	40D935C6	C0827B8C
40D56057	C036985F	423F0000	421ADEB5	00000000	00000000	00000000	00000000
00000000	00000000	00000000	044B6D54	42E4DB6D	4028A27A	414926BD	42BF0C22
044B6F94	43104DB6	4026DE63	414128C2	42C0A3AE	044B71D4	43140DB6	40251988
41393250	42C2A4BA	044B7414	43192DB6	402353F4	41313A28	42C53C8D	044B7654
431C8DB6	40218DB0	41294605	42C8B4CA	044B7894	43205DB6	401FC6C5	4121570A
42CD8B19	044B7AD4	43201DB6	401DFF3A	41197351	42D49F54	044B7D14	43217DB6
401C371A	4111A843	42DF8127	044B7F54	43203DB6	401A6E6D	40A30127	42F08839
044B8194	431F3DB6	4018A53B	405220FE	431088E1	044B83D4	43217DB6	4016DB91
4087B34A	43121A11	044B8614	4320BDB6	40151172	40FBF2A2	4313460B	044B8854
43215DB6	401346EB	41177F66	4314076C	044B8A94	43239DB6	40117C04	411F5ECC
[illegible]	[illegible]	[illegible]	[illegible]	[illegible]	[illegible]	[illegible]	[illegible]