#254

APOLLO 12, 14, 15, 16

PASSIVE SEISMIC CONTINUOUS

69-099C-03E
71-008C-04A
71-063C-01A
72-031C-01A

Tapes)

APOLLO 12 LM/ALSEP

CONTINUOUS DATA TAPES

69-099C-03E

This data set has been restored. There were originally 30 7-track, 800 BPI tapes written in Binary. There are two restored tapes. The DR tapes are 3480 cartridges and the DS tapes are 9-track, 6250 BPI. The original tapes were created on a 1130 computer and the restored tapes were created on an IBM 9021 computer. The DR and DS numbers along with the corresponding D number are as follows:

DR#	DS#	D#	FILES	TIME SPAN	
DR004572	DS004572	D013157	1	07/14/73 - 07/15/73	
		D013156	2	07/15/73 - 07/16/73	
		D013159	3	07/16/73 - 07/17/73	
		D013160	4	07/17/73 - 07/18/73	
		D013158	5	07/18/73 - 07/19/73	
		D013379	6	07/19/73 - 07/20/73	
		D014018	7	07/20/73 - 07/21/73	
		D012766	8	07/21/73 - 07/22/73	
		D012767	9	07/22/73 - 07/23/73	
		D013380	10	07/23/73 - 07/24/73	(a)
		D013277	11	07/24/73 - 07/25/73	
		D013278	12	07/25/73 - 07/26/73	
		D013279	13	07/26/73 - 07/27/73	(b)
		D013913	14	07/27/73 - 07/28/73	
		D013914	15	07/28/73 - 07/29/73	
DR004573	DS004573	D013378	1	07/29/73 - 07/30/73	
		D013282	2	07/30/73 - 07/31/73	
		D013281	3	07/31/73 - 08/01/73	
		D013283	4	08/01/73 - 08/02/73	(c)
		D013377	5	08/02/73 - 08/03/73	
		D013918	6	08/03/73 - 08/04/73	
		D013280	7	08/04/73 - 08/05/73	
		D013915	8	08/05/73 - 08/06/73	
		D013522	9	08/06/73 - 08/07/73	
		D013523	10	08/07/73 - 08/08/73	
		D013919	11	08/08/73 - 08/09/73	
		D013920	12	08/09/73 - 08/10/73	
		D013912	13	08/10/73 - 08/11/73	(d)
		D013916	14	08/11/73 - 08/12/73	
		D013917	15	08/12/73 - 08/13/73	

(a) D013380 : Read errors occurred in records 1127 & 1128 of file 1.
(b) D013279 : Read error occurred in record 1576 of file 1.
(c) D013283 : Read error occurred in record 282 of file 1.
(d) D013912 : Read error occurred in record 887 of file 1.

REQ. AGENT	RASH NO.	ACQ. AGENT
ROP	RB5023	WSC

APOLLO 12, 14, 15, 16

PASSIVE SEISMIC CONTINUOUS

69-099C-03E
71-008C-04A
71-063C-01A
72-031C-01A

This data set contains 30 Apollo 12, 31 Apollo 14, 31 Apollo 15, and 30 Apollo 15, 800 BPI, Binary, 7-track tapes created on an IBM 1130 computer. * Each tape contains one file of continuous data. The data records contain 18 word logical records with 90 logical records per physical record.

APOLLO 12 69-099C-03E

D#	C#	TIME SPAN
D-13157	C-10188	07/14/73 - 07/15/73
D-13156	C-10187	07/15/73 - 07/16/73
D-13159	C-10190	07/16/73 - 07/17/73
D-13160	C-10191	07/17/73 - 07/18/73
D-13158	C-10189	07/18/73 - 07/19/73
D-13379	C-11036	07/19/73 - 07/20/73
D-14018	C-11037	07/20/73 - 07/21/73
D-12766	C-10185	07/21/73 - 07/22/73
D-12767	C-10186	07/22/73 - 07/23/73
D-13380	C-10196	07/23/73 - 07/24/73
D-13277	C-10192	07/24/73 - 07/25/73
D-13278	C-10193	07/25/73 - 07/26/73
D-13279	C-11038	07/26/73 - 07/27/73
D-13913	C-11039	07/27/73 - 07/28/73
D-13914	C-11040	07/28/73 - 07/29/73
D-13378	C-11041	07/29/73 - 07/30/73

* The tapes were made on a IBM 7090 using a program that writes the tapes in IBM 1130 format, they were then duped on a CDC 3200.

D#	C#	TIME SPAN
D-13282	C-11042	07/30/73 - 07/31/73
D-13281	C-10194	07/31/73 - 08/01/73
D-13283	C-11043	08/01/73 - 08/02/73
D-13377	C-10195	08/02/73 - 08/03/73
D-13918	C-11264	08/03/73 - 08/04/73
D-13280	C-11044	08/04/73 - 08/05/73
D-13915	C-11094	08/05/73 - 08/06/73
D-13522	C-11045	08/06/73 - 08/07/73
D-13395	C-10241	08/07/73 - 08/08/73
D-13919	C-11047	08/08/73 - 08/09/73
D-13920	C-11048	08/09/73 - 08/10/73
D-13912	C-11049	08/10/-3 - 08/11/73
D-13916	C-11050	08/11/73 - 08/12/73
D-13917	C-11051	08/12/73 - 08/13/73

APOLLO 14 71-008C-04A

D#	C#	TIME SPAN
D-13164	C-10202	07/13/73 - 07/14/73
D-13383	C-11052	07/14/73 - 07/15/73
D-13165	C-10203	07/15/73 - 07/16/73
D-13162	C-10201	07/16/73 - 07/17/73
D-12771	C-10199	07/17/73 - 07/18/73
D-13166	C-10204	07/18/73 - 07/19/73
D-12770	C-10198	07/19/73 - 07/20/73
D-13161	C-10200	07/20/73 - 07/21/73
D-12768	C-10197	07/21/73 - 07/22/73
D-13286	C-10206	07/22/73 - 07/23/73
D-13288	C-11053	07/23/73 - 07/24/73
D-13287	C-10207	07/24/73 - 07/25/73
D-13526	C-10210	07/25/73 - 07/26/73
D-13385	C-11054	07/26/73 - 07/27/73
D-13926	C-11055	07/27/73 - 07/28/73
D-13929	C-11056	07/28/73 - 07/29/73
D-13285	C-11057	07/29/73 - 07/30/73
D-14019	C-11058	07/30/73 - 07/31/73
D-13284	C-10205	07/31/73 - 08/01/73
D-12769	C-11059	08/01/73 - 08/02/73
D-13381	C-10208	08/02/73 - 08/03/73
D-13921	C-11060	08/03/73 - 08/04/73
D-13289	C-11061	08/04/73 - 08/05/73
D-13924	C-11265	08/05/73 - 08/06/73
D-13927	C-11062	08/06/73 - 08/07/73
D-13384	C-10209	08/07/73 - 08/08/73
D-13928	C-11063	08/08/73 - 08/09/73
D-13923	C-11064	08/09/73 - 08/10/73

D#	C#	TIME SPAN
D-14020	C-11065	8/10/73 - 8/11/73
D-13922	C-11066	8/11/73 - 8/12/73
D-13925	C-11067	8/12/73 - 8/13/73

APOLLO 15 71-063C-01A

D#	C#	TIME SPAN
D-13168	C-10215	7/13/73 - 7/14/73
D-13292	C-11068	7/14/73 - 7/15/73
D-13172	C-10219	7/15/73 - 7/16/73
D-13167	C-10214	7/16/73 - 7/17/73
D-13171	C-10218	7/17/73 - 7/18/73
D-13173	C-10220	7/18/73 - 7/19/73
D-13169	C-10216	7/19/73 - 7/20/73
D-13170	C-10217	7/20/73 - 7/21/73
D-12774	C-10213	7/21/73 - 7/22/73
D-13296	C-10224	7/22/73 - 7/23/73
D-12773	C-10212	7/23/73 - 7/24/73
D-12772	C-10211	7/24/73 - 7/25/73
D-13930	C-11069	7/25/73 - 7/26/73
D-14014	C-11070	7/26/73 - 7/27/73
D-13293	C-10222	7/27/73 - 7/28/73
D-13291	C-10221	7/28/73 - 7/29/73
D-13174	C-11071	7/29/73 - 7/30/73
D-13290	C-11072	7/30/73 - 7/31/73
D-13294	C-10223	7/31/73 - 8/01/73
D-13388	C-10226	8/01/73 - 8/02/73
D-13391	C-10228	8/02/73 - 8/03/73
D-13936	C-11073	8/03/73 - 8/04/73
D-13389	C-10227	8/04/73 - 8/05/73
D-13931	C-11074	8/05/73 - 8/06/73
D-13938	C-11095	8/06/73 - 8/07/73
D-13386	C-10225	8/07/73 - 8/08/73
D-13934	C-11075	8/08/73 - 8/09/73

D#	C#	TIME SPAN
D-13933	C-11076	8/09/73 - 8/10/73
D-13932	C-11077	8/10/73 - 8/11/73
D-13935	C-11078	8/11/73 - 8/12/73
D-13937	C-11079	8/12/73 - 8/13/73

APOLLO 16 72-031C-01A

D#	C#	TIME SPAN
D-12778	C-11080	7/14/73 - 7/15/73
D-13178	C-10235	7/15/73 - 7/16/73
D-13298	C-11081	7/16/73 - 7/17/73
D-12777	C-11082	7/17/73 - 7/18/73
D-13177	C-10234	7/18/73 - 7/19/73
D-13176	C-10233	7/19/73 - 7/20/73
D-13175	C-10232	7/20/73 - 7/21/73
D-12779	C-10231	7/21/73 - 7/22/73
D-12775	C-10229	7/22/73 - 7/23/73
D-13180	C-11083	7/23/73 - 7/24/73
D-12776	C-10230	7/24/73 - 7/25/73
D-13943	C-11084	7/25/73 - 7/26/73
D-13394	C-10240	7/26/73 - 7/27/73
D-13300	C-10237	7/27/73 - 7/28/73
D-13299	C-10236	7/28/73 - 7/29/73
D-14023	C-11085	7/29/73 - 7/30/73
D-13301	C-10238	7/30/73 - 7/31/73
D-13393	C-11086	7/31/73 - 8/01/73
D-13179	C-11087	8/01/73 - 8/02/73
D-13392	C-10239	8/02/73 - 8/03/73
D-13945	C-11088	8/03/73 - 8/04/73
D-13527	C-10242	8/04/73 - 8/05/73
D-14022	C-11089	8/05/73 - 8/06/73
D-13944	C-11096	8/06/73 - 8/07/73
D-13395	C-10241	8/07/73 - 8/08/73
D-14021	C-11090	8/08/73 - 8/09/73

D#	C#	TIME SPAN
D-13941	C-11091	8/09/73 - 8/10/73
D-13942	C-11092	8/10/73 - 8/11/73
D-13940	C-11097	8/11/73 - 8/12/73
D-13939	C-11093	8/12/73 - 8/13/73

APOLLO 12, 14, 15 & 16

PASSIVE SEISMIC CONTINUOUS

69-099C-03E
71-008C-04A
71-063C-01A
72-031C-01A

WORD	DESCRIPTION	TYPE
1	Experiment Identification (PS Exp)	BCD
2	ALSEP Number (ALSEPX)	BCD
3	Mission Identification (A/SXXX)	BCD
4	Space	BCD

APOLLO 12, 14, 15 & 16
69-099C-03E, 71-008G-04A, 71-063C-01A, 72-031C-01A
PASSIVE SEISMIC CONTINUOUS
DATA RECORD FORMAT

WORD 1

ELAPSED TIME, MSEC

WORD 2

1-4	5-10	11	12	13-22	23-24	25-36
SYNTHESIZER ID	BIT ERROR RATE	DATA MODE	BANK	MAGNETO-METER DATA	0	SPARE

WORD 3

1-10	11-12	13-22	23-24	25-34	35-36
CONTROL WORD	0	CONTROL WORD	0	CONTROL WORD	0

WORD 4

1-10	11-12	13-22	23-24	25-34	35-36
SHORT PERIOD SEISMIC (Z)	0	SHORT PERIOD SEISMIC (Z)	0	SHORT PERIOD SEISMIC (Z)	0

WORD 5

1-10	11-12	13-22	23-24	25-34	35-36
LONG PERIOD SEISMIC (X)	0	SHORT PERIOD SEISMIC (Z)	0	LONG PERIOD SEISMIC (Y)	0

WORD 6

1-10	11-12	13-22	23-24	25-34	35-36
SHORT PERIOD SEISMIC (Z)	0	LONG PERIOD SEISMIC (Z)	0	SHORT PERIOD SEISMIC (Z)	0

WORD 7

1-10	11-12	13-22	23-24	25-34	35-36
SHORT PERIOD SEISMIC (Z)	0	SHORT PERIOD SEISMIC (Z)	0	SHORT PERIOD SEISMIC (Z)	0

WORD 8

1-10	11-12	13-22	23-24	25-34	35-36
SHORT PERIOD SEISMIC (Z)	0	SHORT PERIOD SEISMIC (Z)	0	LONG PERIOD SEISMIC (X)	0

WORD 9

1-10	11-12	13-22	23-24	25-34	35-36
SHORT PERIOD SEISMIC (Z)	0	LONG PERIOD SEISMIC (Y)	0	SHORT PERIOD SEISMIC (Z)	0

WORD 10

1-10	11-12	13-22	23-24	25-34	35-36
LONG PERIOD SEISMIC (Z)	0	SHORT PERIOD SEISMIC (Z)	0	SHORT PERIOD SEISMIC (Z)	0

WORD 11

1-10	11-12	13-22	23-24	25-34	35-36
HOUSE-KEEPING DATA	0	SHORT PERIOD SEISMIC (Z)	0	LONG PERIOD TOTAL	0

WORD 12

1-10	11-12	13-22	23-24	25-34	35-36
SHORT PERIOD SEISMIC (Z)	0	SENSOR UNIT TEMPER-ATURE	0	SHORT PERIOD SEISMIC (Z)	0

WORD 13

1-10	11-12	13-22	23-24	25-34	35-36
SHORT PERIOD SEISMIC (Z)	0	LONG PERIOD SEISMIC (X)	0	SHORT PERIOD SEISMIC (Z)	0

WORD 14

1-10	11-12	13-22	23-24	25-34	35-36
LONG PERIOD SEISMIC (Y)	0	SHORT PERIOD SEISMIC (Z)	0	LONG PERIOD SEISMIC (Z)	0

WORD 15

1-10	11-12	13-22	23-24	25-34	35-36
COMMAND VERIFI-CATION	0	SHORT PERIOD SEISMIC (Z)	0	SHORT PERIOD SEISMIC (Z)	0

WORD 16

1-10	11-12	13-22	23-24	25-34	35-36
SHORT PERIOD SEISMIC (Z)	0	SHORT PERIOD SEISMIC (Z)	0	LONG PERIOD SEISMIC (X)	0

WORD 17

1-10	11-12	13-22	23-24	25-34	35-36
SHORT PERIOD SEISMIC (Z)	0	LONG PERIOD SEISMIC (Y)	0	SHORT PERIOD SEISMIC (Z)	0

WORD 18

1-10	11-12	13-22	23-24	25-34	35-36
LONG PERIOD SEISMIC (Z)	0	SHORT PERIOD SEISMIC (Z)	0	SHORT PERIOD SEISMIC (Z)	0

PASSIVE SEISMIC EXPERIMENT

NASA EXPERIMENT NO. S-031

NSSDC IDENTIFICATION NO. APOLLO 12 69-099C-03
APOLLO 14 71-008C-04
APOLLO 16 72-031C-01

Apollo 15 71-063C-01

MAP COORDINATES

APOLLO 11 ALSEP	0.65N	23.50E
APOLLO 12 ALSEP	3.04S	23.42W
APOLLO 14 ALSEP	3.65S	17.48W
APOLLO 15 ALSEP	26.08N	3.66E
APOLLO 16 ALSEP	8.97S	15.52E
APOLLO 17 ALSEP	20.16N	30.75E
APOLLO 12 LM IMPACT	3.94S	21.20W
APOLLO 13 SIVB IMPACT	2.75S	27.86W
APOLLO 14 SIVB IMPACT	8.09S	26.02W
APOLLO 14 LM IMPACT	3.42S	19.67W
APOLLO 15 SIVB IMPACT	1.51S	11.81W
APOLLO 15 LM IMPACT	26.36N	0.25E
APOLLO 16 SIVB IMPACT	1.83N	23.30W
APOLLO 17 SIVB IMPACT	7.01S	7.85W(P)
APOLLO 17 LM IMPACT	19.93N	30.53E(P)

DISTANCE, KM

	12 ALSEP	14 ALSEP	15 ALSEP	16 ALSEP	17 ALSEP
APOLLO 17 ALSEP	1781	1632	840	998	----
APOLLO 16 ALSEP	1187	1007	1119	----	998
APOLLO 15 ALSEP	1188	1095	----	1119	840
APOLLO 14 ALSEP	181	----	1095	1007	1632
APOLLO 12 LM IMPACT	73	----	----	----	----
APOLLO 13 SIVB IMPACT	135	----	----	----	----
APOLLO 14 SIVB IMPACT	172	----	----	----	----
APOLLO 14 LM IMPACT	114	67	----	----	----
APOLLO 15 SIVB IMPACT	355	184	----	----	----
APOLLO 15 LM IMPACT	1130	1048	93	----	----
APOLLO 16 SIVB IMPACT	132	243	1099	----	----
APOLLO 17 SIVB IMPACT	716	542	800	543	----
APOLLO 17 LM IMPACT	1778	1623	837	988	10

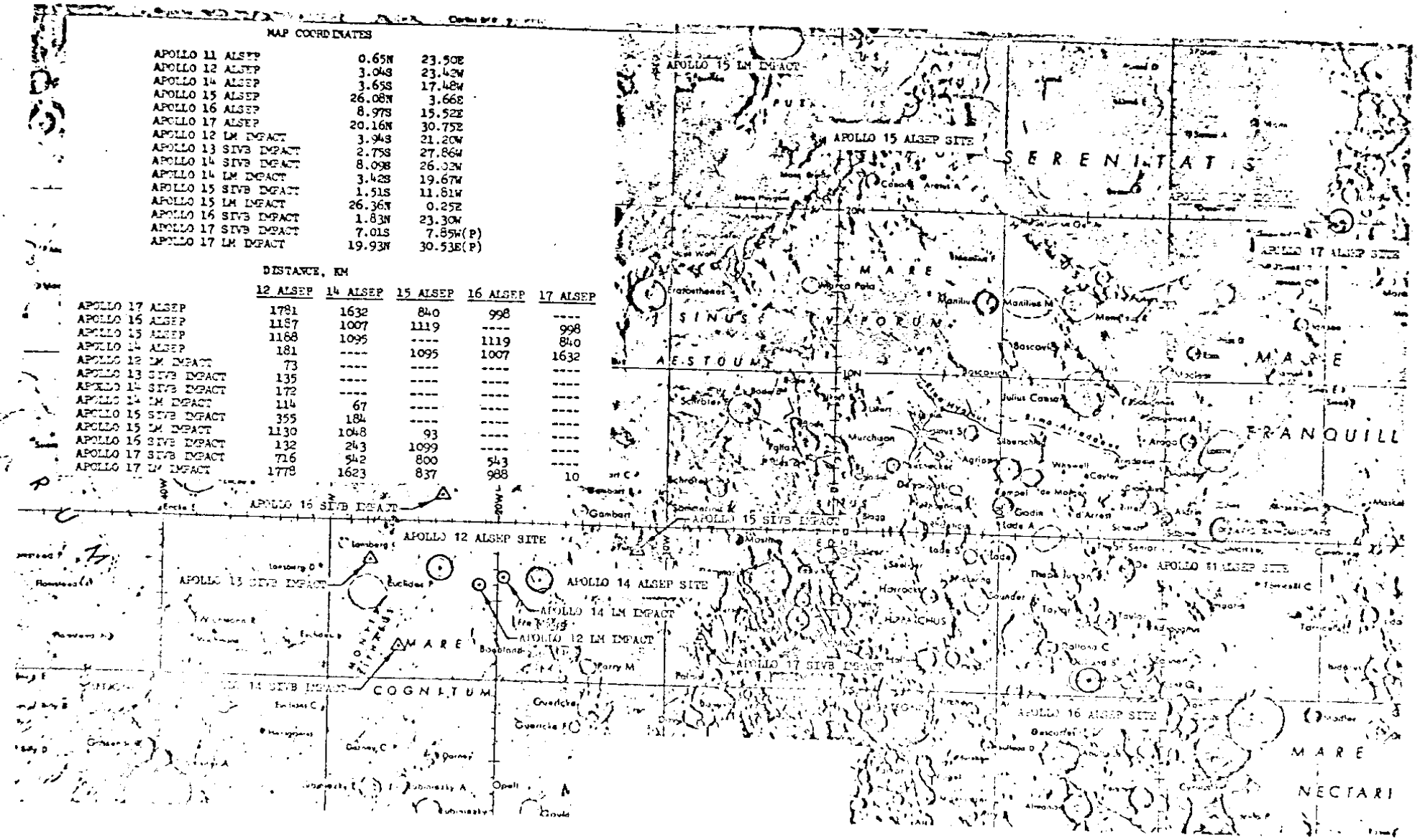

Dr. Barnes

AUG 15 1973

Apollo Passive Seismic Experiment

Data File

Preface:

This report contains information necessary to use the lunar seismic data file available at Goddard Space Flight Center. No attempt is made to describe the data itself, but only the instruments, historical background, and the formats in which data are stored.

CONTENTS

Section 1 Operational History

Table 1: Station Statistics
Table 2: Operational History
Figure 1: Location Map

Section 2 Instrument Characteristics

Figure 2: Sensor unit

Figure 3: Long period components

Figure 4: Instrument Response Curves

Section 3 Data Set Descriptions

1) Compressed Playouts

2) Event Tapes

3) Event Compressed Playouts

4) Artificial Impact Event Tapes

Table 3: Artificial Impact Data

5) Expanded Playouts

6) Event Catalog

7) P.S.E. Tapes

Section 4 Tape Formats and Irregularities

1) Formats

Table 4: P.S.E. ALSEP Words

Table 5: ALSEP Word Locations

2) PSE Tape Irregularities

Section 5 Bibliography

Section 1 - Operational History

Seismic stations were installed on the lunar surface by the astronauts of Apollo missions 11, 12, 14, 15, and 16. The locations and installation dates of the seismic stations are listed in Table 1. Station 11 operated only 16 days before loss of the command uplink terminated operation. The four remaining stations constitute the Apollo Seismic Network. This network spans the near side of the Moon in an approximate equilateral triangle with 1100 km spacing between stations (stations 12 and 14 are 181 km apart at one corner of the triangle as shown in Figure 1).

Four seismometers are included at each station: Three long-period components forming a triaxial set (one sensitive to vertical motion and two sensitive to horizontal motion), with sensitivity to ground motion sharply peaked at 0.45 Hz (peaked-response mode); and a fourth seismometer sensitive to vertical motion with peak sensitivity at 8 Hz (short period component). These instruments can detect vibrations of the lunar surface as small as one-half angstrom at maximum sensitivity. Of the sixteen separate seismometers, all but two are presently operating properly. The short period component at station 12 has failed to operate since initial activation, and one of the long period seismometers at station 14 (vertical component) became unstable after one year.

Unless otherwise indicated in the Operation History listing, Table 2, the instruments have been operated at maximum sensitivity with the long-period seismometers in the peaked-response mode. This configuration is designated as the "standard mode" in Table 2. The various operating modes are described in Section 2. Although not noted in Table 2, all seismometers at a given station were operated at reduced gain while the astronauts remained on the surface.

In addition to signals from natural sources (moonquakes and meteoroid impacts), signals were recorded from nine man-made impacts. These were provided by two types of space vehicles: the LM (Lunar Module) ascent stage and the third, or S-IVB, stage of the Saturn booster. The LM's were guided to impact following the return of the surface crew to the CSM (Command Service Module) in lunar orbit. The S-IVB stages were directed by remote control from Earth to planned impact points following separation from the Apollo spacecraft. Seismic signals from these impacts were recorded at ranges of from 67 to 1750 km. Data pertinent to the impacts are given in Section 3.

Table I: LUNAR PASSIVE SEISMIC STATION STATISTICS

STATION	Date of Deployment Yr.	Day	Location[a] Lat.	Long.	Distance from LM (m)	Azimuth of Components[b] +X	+Y	Distance and Azimuths from other stations 12	14	15	16
11	'69	208	1.75°N	23.45°W	16.8	0°	90°	---	---	---	---
12	'69	323	3.04°S	23.42°E	130	180°	270°	---	181 km 276°	1188 km 226°	1187 km 276°
14	'71	036	3.65°S	17.48°W	178	0°	90°	181 km 96°	---	1095 km 218°	1007 km 277°
15	'71	212	26.08°N	3.66°E	110	0°	90°	1188 km 40°	1095° 33°	---	1119 km 342°
16	'72	109	8.97°S	15.51°E	95	334.5°	64.5°	1187 km 100°	1007 km 101°	1119 km 160°	---

a. Listed coordinates are derived from the Manned Space Flight Network Apollo tracking data. Locations based on these data are referenced to a mean spherical surface and may differ by several kilometers from coordinates referenced to surface features.

b. Upward ground motion produces positive-going output signal for the vertical components. The listed azimuths for the horizontal-component seismometers are the directions of ground motion that give positive-going output signal (0° = North, 90° = East, 180° = South, 270° = West).

Table 2 Operational History

DATE Yr.	Day	Station	EVENT
69	208	11	Deployment: Flat response mode
69	215	11	Station turned off for lunar night
69	230	11	Station turned on for 2nd lunar day
69	237	11	Long period components drift off scale, station overheating and not accepting commands
69	239	11	Loss of all data
69	323	12	Deployment: Flat response mode Short period component not operating LPZ operating with abnormal long period response
	326	12	Changed long period response to standard mode to bring LPZ back into operation.
70	105	12	Reduce LP gain to -10 db during S4B13 impact (01 hrs 24 min)
70	105	12	Increase LP gain to 0 db (02 hrs 30 min)
71	036	14	Deployment: standard mode
71	210	14	Reduce LP gain to -10 db during S4B 15 impact (21 hrs 00 min)
71	210	14	Increase LP gain to 0 db (21 hrs 47 min)
71	212	15	Deployment: standard mode
71 72	330 to 030	14	LPZ axis anomalously noisy affecting LPX and LPY. After mid-January LPZ is usually dead but occasionally has periods of normal operation.
72	109	16	Deployment: standard mode
72	343	16	LPY anomalous noise and reduced gain
72	345	14	Reduce LP again to -10 db during S4B17 impact (20 hrs 35 min)
	345	14	Increase LP gain to 0 db (20 hrs 55 min)
72	348	16	LPY back to normal

Section 2 INSTRUMENT CHARACTERISTICS

A seismometer consists of a mass free to move in one direction that is suspended by means of springs and/or hinges from a framework. The suspended mass is supplied with damping to suppress vibrations at the natural period of the system. The framework rests on and moves with the surface. The suspended mass tends to remain fixed in space and the resulting relative motion between the mass and the framework can be recorded and used to calculate the original ground motion.

The Apollo seismic stations consist of two main subsystems: the sensor unit and the electronics module. The sensor unit, shown schematically in figures 2 and 3 contain three matched long period (LP) seismometers aligned orthogonally to measure vertical and horizontal ground motions. The unit also contains a vertical short period (SP) seismometer. The instrument is constructed principally of beryllium and weighs 11.5 kg, including the electronics module and thermal insulation. Without insulation, the sensor unit is 23 cm in diameter and 29 cm high. The total power drain varies between 4.3 and 7.4 W.

Instrument temperature control is provided by a 6-W heater, a proportional controller and except for station 11, an aluminized Mylar insulation. The insulating shroud is spread over the local surface to reduce temperature variations in the surface material.

The seismic response curves are shown in (fold out) figure 4. The LP seismometers have a useful frequency range from 0.004 to 2 Hz. The SP seismometers cover a band from 0.05 to 20 Hz. Two modes of operation, flat and peaked response, are possible for the LP seismometers. In the flat response mode, the LP seismometers have natural periods of 15 sec. In the peaked response mode, the seismometers act like underdamped pendulums with natural periods of 2.2 sec. Maximum

sensitivity is increased by a factor of 5.6 in the peaked response mode, but sensitivity to low frequency signals is reduced. Calibration of each sensor is accomplished by applying a step of current to each coil by command from Earth. At tidal frequencies, gravitational acceleration is measured by monitoring the feedback current used to center the seismometer mass. The tidal sensitivity of the instruments is 8×10^{-3} milligals per digital unit.

The LP horizontal seismometers (LPX and LPY) are very sensitive to tilts and must be leveled to high accuracy. This is accomplished by means of a two-axis, motor-driven gimbal. A third motor adjusts the LPZ seismometer in the vertical direction. Motor operation is controlled by command.

A caging system is provided to secure all critical elements of the instrument against damage during transport and deployment phases. A pneumatic system is used in which pressurized bellows expand and clamp fragile parts in place. Uncaging is accomplished by piercing the connecting lines.

The seismometer systems are controlled from earth by a set of 15 commands that govern functions such as leveling, instrument gain (adjustable in 10 db steps), and calibration.

Seismic disturbances are observed on the long-period seismometers of each station throughout the daytime period of each lunar day. These disturbances are most intense near times of sunrise and sunset, and are believed to be due to thermal contraction and expansion of the Mylar shroud that covers the seismometers, or the cable connecting the seismometers to the central station, or both.

Time codes recorded on PSE tapes are normally those generated from time codes on range tapes, and are believed to be accurate within a few tens of milliseconds of GMT when signal is received at a range station.

However, when it is difficult to extract time information from range tapes, time codes generated from an "internal clock", a clock internal to a computer at Johnson Spacecraft Center, is substituted. Since this internal clock is not synchronized with tape speed during range tape playback, the time codes thus generated are only as accurate as the accuracy of the speed of the tape transport. The time codes thus generated may drift as much as several tens of seconds from true GMT if allowed to continue for several hours. Users of the PSE tapes should be aware of possible time code errors in situations where relative time between stations is important. The reader is directed to the section on PSE tape irregularities for further discussion of errors occurring on PSE tapes.

The reader is directed to the bibliography for more detailed discussions of instrumentation, especially Latham, et al., 1969, Breseke and Lewko, 1971, and Sutton and Latham, 1964.

Section 3: Data Set Descriptions

1. Compressed Scale Playouts

The compressed scale playouts yield a complete time history of the lunar seismic data. Data from each station are read from tape (Passive Seismic Experiment (PSE) tapes supplied by NASA, Johnson Spacecraft Center) and plotted synchronously in compressed form. To enhance the signal-to-noise ratio for higher frequency events, a difference method is employed in reduction of the data. The absolute value of the difference between consecutive data points is summed over 40 points for long-period data (320 points for short period data) and this value is plotted yielding one value for each six seconds of data. Consecutive points are plotted with opposite polarity to yield a line with the appearance of a seismogram. A horizontal scale of 20 minutes per inch and vertical scales of 400 digital units per inch (long period) and 3200 digital units per inch (short period) are used. Components at each station are arranged LPX, LPY, LPZ, SPZ with long period X at the top and short period Z at the bottom. Time tics are displayed every ten minutes and each hour (GMT) is labeled. The year and day are displayed every six hours.

2. Event Tapes

Seismic events (see data set #6) detected on the long period components by routine manual search of the compressed scale playouts (data set #1) are copied from the original PSE tapes to event tapes containing only time periods when seismic events are observed. Each event tape contains data from one station only; the same time periods are copied in chronological order onto separate tapes for each station. Thus, intervals which may contain no detectable signal at one station are on event tapes because an event was detected at another station.

FIGURE 2

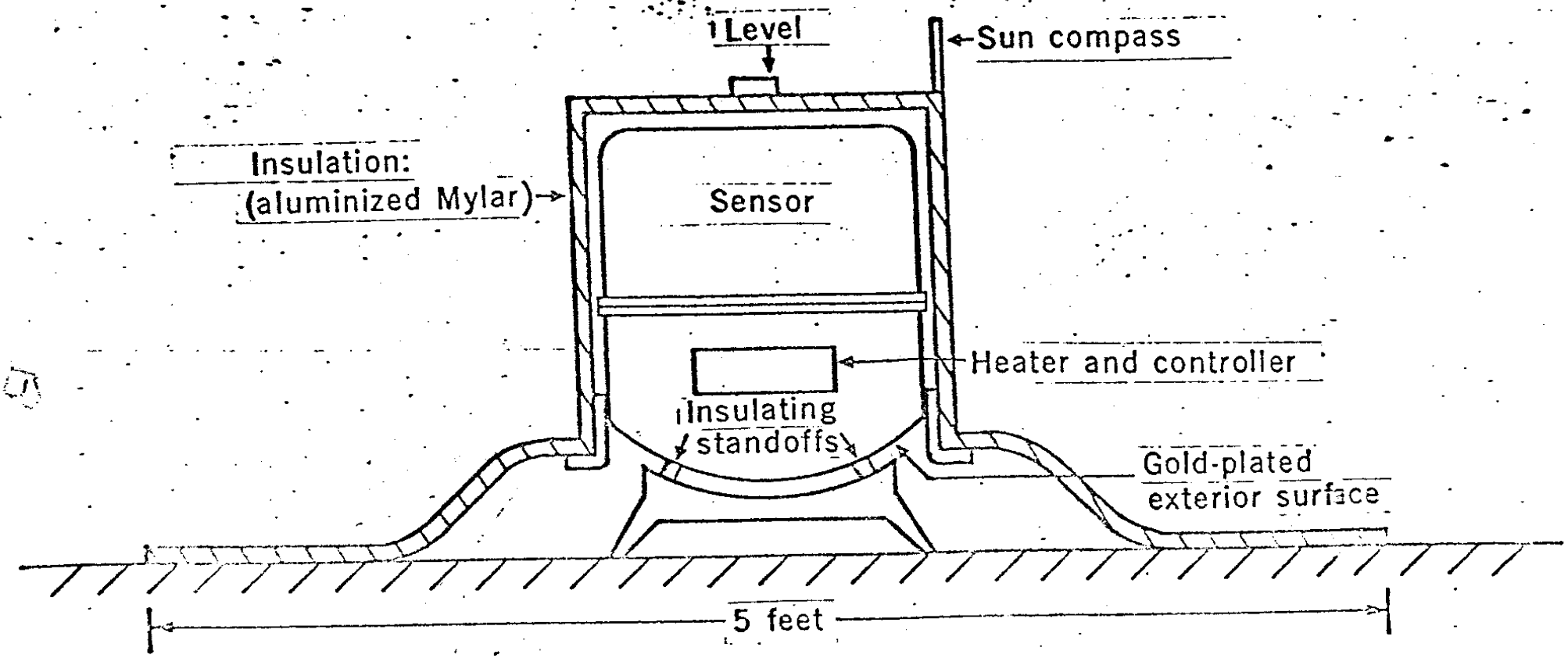
Level
Sun compass
Insulation:
(aluminized Mylar)
Sensor
Heater and controller
Insulating
standoffs
Gold-plated
exterior surface
5 feet

FIGURE 3

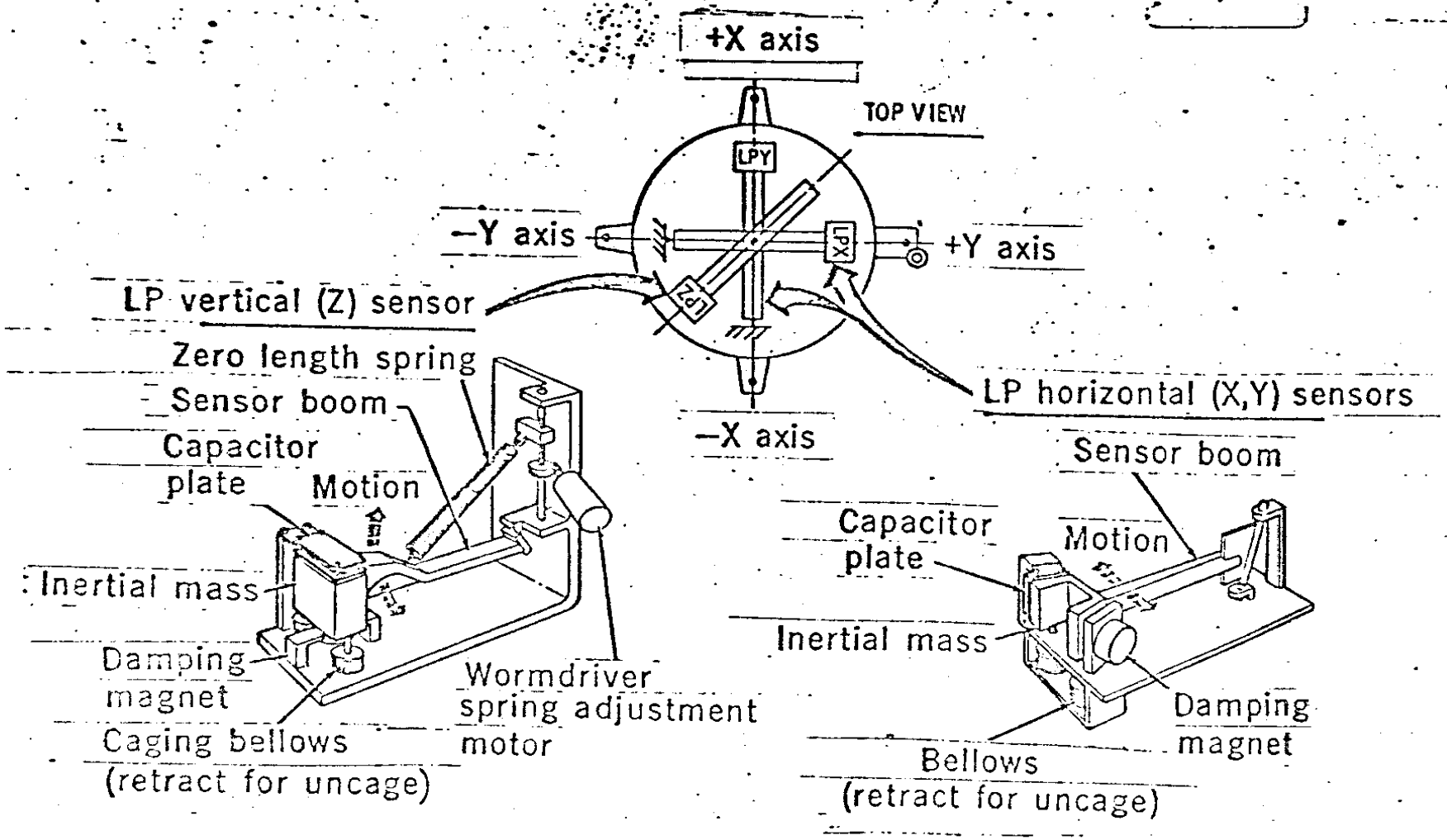
+X axis
TOP VIEW
LPY
LPX
LPZ
−Y axis
+Y axis
LP vertical (Z) sensor
LP horizontal (X,Y) sensors
−X axis
Zero length spring
Sensor boom
Capacitor plate
Motion
Inertial mass
Damping magnet
Caging bellows (retract for uncage)
Wormdriver spring adjustment motor
Sensor boom
Capacitor plate
Motion
Inertial mass
Damping magnet
Bellows (retract for uncage)

Event tapes are numbered serially and are in chronological order. All tapes are labeled with the event tape number, station number, tape number, and total time interval covered by the tape. Listings of the time intervals covered on each tape are supplied with the tapes and can also be found using the next data set (#3). The format with which event tapes are read is described in the section on tape formats.

3. Event Compressed Scale Playouts

Each event tape (data sets #2 and #4) has been plotted in compressed scale to provide a visual display of the contents of each event tape. These playouts have the same format as data set #1 with the exceptions that time is not continuous and an amplitude scale twice that of data set #1 is used.

4. Artificial Impact Event Tapes

Each impact of man-made origin (artificial impacts) has been recorded on a special set of event tapes. These tapes are identical in format to the event tapes (data set #2). Table 3 shows data pertinent to each of the impacts. The reader is directed to the brief station history for information concerning the status of each station at times of impacts. Compressed scale playouts of these events are supplied as part of data set #3.

5. Expanded Playouts

A. Method of Selection: Expanded time scale playouts (usually ten minutes in length) have been generated for the following long-period seismic events.

1. All events observed at station 12 (data set #6) during the period November 20, 1969 to February 5, 1971 with peak-to-peak signal amplitudes of two or more digital units.

Table 3: ARTIFICIAL IMPACT DATA

EVENT	Year, day	hr min sec	Lat.	Long.	Distances (km) and Azimuth from stations 12	14	15	16	Impact Angle from Horizontal	Impact Heading	Impact Energy, ergs
Apollo 12 LM	1969, 324	22 17 17.7	3.94°S	21.21°W	73 112°	-	-	-	3.7°	306°	3.36×10^{16}
Apollo 13 SIVB	1970, 105	01 09 41.0	2.75°S	27.86°W	135 274°	-	-	-	76°	78°	4.63×10^{17}
Apollo 14 SIVB	1971, 035	07 40 55.4	8.09°S	26.02°W	172 207°	-	-	-	69°	103°	5.54×10^{17}
Apollo 14 LM	1971, 038	00 45 25.7	3.42°S	19.67°W	114 96	67 276°	-	-	3.6°	282°	3.25×10^{16}
Apollo 15 SIVB	1971, 210	20 58 42.9	1.51°S	11.81°W	355 83°	184 69°	-	-	62°	97°	4.61×10^{17}
Apollo 15 LM	1971, 215	03 03 37.0	26.36°N	0.25°N	1130 36°	1048 29°	93 276°	-	3.2°	284°	3.43×10^{16}
Apollo 16 SIVB	1972, 110	21 02 04±4*	2.24±.33°N	24.49±.33°W*				-	79° (?)	78°	4.59×10^{17}
Apollo 17 SIVB	1972, 345	20 32 42.3	4.21°S	12.31°W	338 96°	157 96°	1032 209°	850 278°	55°	97°	4.71×10^{17}
Apollo 17 LM	1972, 350	06 50 20.8	19.96°N	30.50°E	1750 64°	1598 61°	770 98°	985 27°	4.9°	283°	3.14×10^{16}

* tracking signal lost before impact. The origin time was obtained by interpretation of seismic data, and the location was extrapolated from the early trajectory.

2. Most of the events observed at two or three stations during the period February 5, 1971 to April 21, 1972.

B. Annotation Formats

1. Events occurring during the years of 1969 and 1970 were detected by station 12 only. The long-period components (X,Y,Z) have been played out for each event. The annotation is as follows:

YEAR

SKIP X MAG (C)

DAY HR MN SECOND

YEAR = year in which the playout begins

SKIP = tape identification numbers which can be ignored

MAG = multiplicative factor which adjusts the signal amplitude of an event for plotting; this number can be ignored.

C = long-period component, e.g. X = long period X component (LPX)
Y = long period Y component (LPY)
Z = long period Z component (LPZ)

DAY = Julian day of the year on which the playout begins

HR, MN, SECOND = universal time at which the playout begins

Time marks are placed at one minute intervals. The first tick mark indicates the time DAY:HR:MIN+1.

2. Playouts of events occurring during the years of 1971 and 1972 are annotated as follows:

YEAR DAY HR MIN

YEAR = year in which the playout begins

DAY = Julian day of the year on which playout begins

HR MIN = time at which the first minute mark is placed; minute marks are indicated by the vertical tick marks superposed upon the seismic traces.

ST = seismic station at which the signal was detected, e.g., 12, 14, 15, 16.

N = 1, 2, 3, or 4, where,

1 = long-period X component (LPX)
2 = long-period Y component (LPY)
3 = long-period Z component (LPZ)
4 = short-period Z component (SPZ)

General Remarks:

1. In almost all cases the data represented by the expanded time scale playouts are taken directly from the PSE tapes and are not processed in any way (e.g., no filtering, smoothing, signal averaging, etc.).
2. Notations on the seismograms such as phase picks (e.g., P, S,) event classification (e.g., A, B, C, M), etc. are not primary data but interpretations of the data and should be recognized and used as such.
3. Time marks are not corrected for possible clock errors.

6. Event Catalog

The event catalog has been compiled from the log of long period events observed on the compressed scale playouts (data set #1). Only events of apparent or probable seismic origin are included. Noise events, such as tilts and thermal noise are not included, nor are events observed exclusively on the short period components. The card deck (or tape in card-image format) contains the same set of events as included on the event tapes (data sets #2 and #4). The cards are arranged in chronological order.

Card format:

columns	format	data
3, 4	I2	year
6,7,8	I3	Julian day
10-13	2I2	start hour-minute

columns	format	data
15-18	2I2	stop hour-minute (9999 for overlaps)
37-40	4I1	playout log, = 1, if expanded scale playout is available at station 12 (col. 37) station 14 (col. 38) station 15 (col. 39) station 16 (col. 40)
42-45	4I1	Quality factor[1] = blank: normal quality = 1 no data = 2 type 6 time error (see section on tape irregularities) = 3 noisy = 4 masked for station: 12 (col. 42) 14 (col. 43) 15 (col. 44) 16 (col. 45)
77	A1	event type* A: classified moonquake M: suspected moonquake C: suspected impact Z: mostly short period X: special type L: LM impact S: SIVB impact
79, 80	I2	Moonquake class[2] (only used in conjunction with type 'A' events)

1 Priority given to smallest number

2 Note that these data are interpretive rather than primary data.

7. PSE TAPES

PSE tapes covering continuous operation of the lunar passive seismic system for a period of one month (April, 1973) are supplies. These tapes are labeled in sequential order from the day of deployment of the instrument as well as with the Julian day and universal start and stop times. The station number and date of tape generation also appear on the tapes. Format for reading of PSE tapes is found in the section on tape formats.

Section 4: Tape Formats and Irregularities

FORMATS

Data sets #2 (event tapes), #4 (artificial impact tapes) and #7 (PSE-tapes, one ~~year~~ lunar month of data) formats are described below. All tapes are ~~7~~ 9 track, 1/2 inch binary, ~~800~~ 6250 bpi, odd parity, with standard IBM EOF on 2400 foot reels.

Data is transmitted from the Moon in 64 word frames, one frame every 0.60375 seconds. The ALSEP words are assigned to meet the needs of the scientific instruments in the Apollo Lunar Surface Experiment Package. Those assigned to the Passive Seismic Experiment are given in Table 4. Each ALSEP word is ten bits, or a range from 0 to 1023 digital units. Sensor equilibrium data values are near 500 digital units. Missing ALSEP words in the short period data (2,46, etc.) should be replaced to obtain equal spacing of data points.

Each frame of data is recorded on tape in a logical record consisting of eighteen 36 bit words for format A and nine 36 bit words for format B. The first three of these words contain timing, synchronization, and error information as described below. The remaining words containing the data are described in Table 5 A and B.

Word 1 contains time at the start of the frame in milliseconds from the beginning of the year starting in bit 1 and ending in bit 35 right justified in binary. The time on January 01 at 00 hours 00 minutes 00 seconds is reset to 8.64×10^7 msec so that the year starts on day 1 rather than day 0.

Word 2 contains a range station I. D. code in bits 0-3, a bit error rate in bits 4-9, and, starting on day 183, 1973, a time source indicator in bit 35 (last bit); if this bit is set, then computer clock time rather than G. M. T. was used for updating the time code. Several tens of seconds of error in time codes have been noted when the computer clock is used.

Word 3 contains synchronization codes and a frame counter. This word should contain the following in bits 0-9, 12-21 and 24-25.

bit:	0	1	2	3	4	5	6	7	8	9	12	13	14	15	16	17	18	19	20	21	24	25
value:	1	1	1	0	0	0	1	0	0	1	0	0	0	0	1	1	1	0	1	1	0	1

If this is not the case, then sync has been lost with the data and errors may be present. Bits 26-32 contain a frame counter which steps once per frame resetting to zero after 89 frames. A break in the sequence may indicate timing errors.

ALSEP words arranged as shown in Table 5 are packed in the 36 bit words as shown below:

bit 0 – 9	9 – 12	12 – 21	21 – 24	24 – 33	33 – 36
ALSEP word A	0 0	ALSEP word B	0 0	ALSEP word C	0 0

Note that in FORMAT B (Table 5-B) the data is compressed by a factor of 2 as all SP ALSEP words are missing. This was done as a cost-saving procedure since the station 12 short period component is not operating.

Each tape begins with two identical label records written in BCD. These records contain four words each as described below:

Word	Parameter
1	experiment I.D. (PS EXP or PSEXPB)
2	ALSEP I. D.
	Sta. 12 = A
	Sta. 14 = B
	Sta. 15 = C
	Sta. 16 = D

Word	Parameter
3	Mission I.D.:
	Sta. 12 = A/S507
	Sta. 14 = A/S509
	Sta. 15 = A/S510
	Sta. 16 = A/S511
4	None or Year (bcd blanks or year)

Event tapes, data sets #2 and #4, differ from normal PSE tapes in that time is not continuous since gaps occur between events. All events are recorded in chronological order. Further information regarding tape encoding and formats is available in NASA documents MSC-00119 and MSC-004434.

TABLE 4

P.S.E. ALSEP Words

ALSEP Word(s)	Description
even words (except 2, 24*, 46, 56)	short period (SP) vertical data
9, 25, 41, 57	long period X component (LPX)
11, 27, 43, 59	long period Y component (LPY)
13, 29, 45, 61	long period Z component (LPZ)
35 (even frames)	X axis tidal
35 (odd frames)	Z axis tidal
37 (even frames)	Y axis tidal
37 (odd frames)	instrument temperature

*Apollo 15 only

TABLE 5-A

ALSEP WORD LOCATIONS

FORMAT A[1]

36 bit word	ALSEP word	USE
4	4, 6, 8	SP, SP, SP
5	9, 10, 11	LPX, SP, LPY
6	12, 13, 14	SP, LPZ, SP
7	16, 18, 20	SP, SP, SP
8	22, 24, 25	SP, SP*, LPX
9	26, 27, 28	SP, LPY, SP
10	29, 30, 32	LPZ, SP, SP
11	33, 34, 35	-, SP, TDLX/Z
12	36, 37, 38	SP, TEMP/TDLY, SP
13	40, 41, 42	SP, LPX, SP
14	43, 44, 45	LPY, SP, LPZ
15	46, 48, 50	-, SP, SP
16	52, 54, 57	SP, SP, LPX
17	58, 59, 60	SP, LPY, SP
18	61, 62, 64	LPZ, SP, SP

* not for Apollo 15

1 used for all tapes (except station 12 tapes after day 288, 1971)

TABLE 5-B

ALSEP WORD LOCATIONS

FORMAT B*

36 bit word	ALSEP WORD	USE
4	9, 11, 13	LPX, LPY, LPZ
5	25, 27, 29	LPX, LPY, LPZ
6	33, 35, 37	-, TDLX/Z, TEMP/TDLY
7	41, 43, 45	LPX, LPY, LPZ
8	46, 57, 59	-, LPX, LPY
9	61, -, -	LPZ

*used only for station 12 starting on day 289, 1971

PSE Tape Irregularities

The following is a list of types of irregularities, other than tape reading errors and data glitches, found in PSE tapes. The user of PSE tapes is urged to be aware of their existence.

1. Data gap

   A normal data gap is represented by a time increment from one logical record to the next by an amount that is an exact multiple of the normal frame rate (603.75 ± 0.05 ms) and an increment of the frame count corresponding to the time increment. Small data gaps, a few seconds in duration, are quite common, occurring at a rate of several to a few tens of times per day.

2. Data overlap

   A normal data overlap is represented by a time decrement from one logical record to the next by an amount that is an exact multiple of the normal frame rate and a decrement of the frame count corresponding to the time decrement. Data overlaps are rare, but they do occur in earlier tapes.

3. Clock offset due to range station switch

   When the range station receiving data from the Moon is switched from one to another, a slight offset in time is observed, which is normally less than 20 milliseconds.

4. Sync error

   When data from the Moon are not correctly translated onto PSE tapes because of errors in synchronization, it is reflected on the Barker code which is included in each logical record. A data gap of a few frames normally follows a sync error.

5. Zero record

Some logical records are filled with all zeroes. A data gap may or may not occur at the same time.

6. Clock rate error

This occurs when time information based on a computer internal clock is substituted. It can be identified by an abnormal time increment from one frame to the next. The normal time increment per frame is 603 or 604 milliseconds, with 90-frame average in the range of 603.70 to 603.80 milliseconds. The abnormal clock rate is usually less than 0.5% off normal, but larger anomalies are found. The duration of this error is from a few minutes to as much as 6 to 8 hours. An anomalous period usually starts with a small offset in frame count and ends with a large offset in frame count, representing a large clock adjustment. Multiple clock adjustments are found in some cases. The amount of clock adjustment ranges from a fraction of a second to several tens of seconds. The time information on tapes are nearly continuous, thus generating a data gap or a data overlap without clear indication of their existence when the clock is adjusted.

7. Time/frame count error

Simultaneous discontinuities in time and frame count which do not agree with each other occur rather frequently without abnormal clock rate. They occur in pairs or multiples so that the net offset in time and/or frame count is always zero. The offset in time at a discontinuity is often either an exact multiple of the normal frame rate or even seconds. When it is an exact multiple of the normal frame rate, whether the error is in time or in frame count cannot be determined. When it

is not an exact multiple of the normal frame rate, including offsets of even seconds, a time error is indicated.

Section 5: BIBLIOGRAPHY

Breseke, D. J., and J. Lewko, Jr. The Passive Seismic Experiment, in Lunar Surface Exploration, Bendix Technical Journal, Vol. 4, No. 2, 28-40, 1971.

Duennebier, F. K., Moonquakes and Meteoroids: Results from the Apollo Passive Seismic Experiment Short Period Component, Ph.D. Dissertation, University of Hawaii, Honolulu, Hawaii, 1972.

Ewing, M., G. Latham, F. Press, G. Sutton, J. Dorman, Y. Nakamura, R. Meissner, and F. Duennebier, Seismology of the Moon and Implications of Internal Structure, Origin, and Evolution, Highlights of Astronomy, D. Reidel Pub. Co. (Dordrecht, Holland), pp. 155-172, 1971.

Lammlein, David R., Lunar Seismicity, Structure, and Tectonics, Ph.D. Dissertation, Columbia University, 1973.

Latham, G. V., F. Press, and G. Sutton, The Apollo Passive Seismic Experiment, Science, 165, 241-251, 1969.

Latham, G. V., M. Ewing, F. Press, G. Sutton, J. Dorman, N. Toksoz, R. Wiggins, Y. Nakamura, J. Derr, and F. Duennebier, Passive Seismic Experiment, in Apollo 11 Preliminary Science Report, NASA SP-214, 143-162, 1969.

Latham, G. V., M. Ewing, F. Press, G. Sutton, J. Dorman, Y. Nakamura, N. Toksoz, R. Wiggins, and R. Kovach, Passive Seismic Experiment, in Apollo 12 Preliminary Science Report, NASA SP-235, 39-54, 1970.

Latham, G. V., M. Ewing, F. Press, G. Sutton, J. Dorman, Y. Nakamura, N. Toksoz, R. Wiggins, J. Derr, and F. Duennebier, Apollo 11 Passive Seismic Experiment, Science, Vol. 167, No. 3918, 455-467, 1970.

Latham, G. V., M. Ewing, J. Dorman, F. Press, N. Toksoz, G. Sutton, R. Meissner, F. Duennebier, Y. Nakamura, R. Kovach, and M. Yates, Seismic Data from Man-Made Impacts on the Moon, Science, 170, 620-626, 1970.

Latham, G. V., M. Ewing, F. Press, G. Sutton, J. Dorman, Y. Nakamura, N. Toksoz, R. Wiggins, J. Derr, and F. Duennebier, Apollo 11 Passive Seismic Experiment, Proc. Apollo 11 Lunar Science Conf., Vol. 3, A. A. Levinson, ed., Pergamon Press (New York), 2309-2320, 1970.

Latham, G. V., M. Ewing, F. Press, G. Sutton, J. Dorman, Y. Nakamura, N. Toksoz, F. Duennebier, and D. Lammlein, Passive Seismic Experiment in Apollo 14 Preliminary Science Report, NASA SP-272, 133-162, 1971.

Latham, G. V., M. Ewing, F. Press, G. Sutton, J. Dorman, Y. Nakamura, N. Toksoz, D. Lammlein, and F. Duennebier, Moonquakes, Science, 174, 687-692, 1971.

Latham, G. V., M. Ewing, J. Dorman, D. Lammlein, F. Press, G. Sutton, Y. Nakamura, N. Toksoz, and F. Duennebier, Moonquakes and Lunar Tectonism, The Moon, Vol. 4, No. 3/4, 373-382, 1972.

Latham, G. V.,M. Ewing, F. Press, G. Sutton, J. Dorman, D. Lammlein, N. Toksoz, F. Duennebier, and Y. Nakamura, Moonquakes and Lunar Tectonism, Proc. Third Lunar Science Conf., Vol. 3, David R. Criswell, ed., MIT Press (Cambridge, Mass.), 1972.

Latham, G. V., M. Ewing, F. Press, G. Sutton, J. Dorman, Y. Nakamura, N. Toksoz, D. Lammlein, and F. Duennebier, Passive Seismic Experiment, in Apollo 15 Preliminary Science Report, NASA SP-289, 8-1-8-25, 1972.

Latham, G. V. M. Ewing, F. Press, G. Sutton, J. Dorman, Y. Nakamura, N. Toksoz, D. Lammlein, and F. Duennebier, Passive Seismic Experiment, in Apollo 16 Preliminary Science Report, NASA SP-315, 9-1-9-29, 1972.

Latham, G. V., M. Ewing, J. Dorman, and Y. Nakamura, Lunar Structure and Dynamics - Results from the Apollo Passive Seismic Experiment, The Moon, 1, 1973.

Latham, G., J. Dorman, F. Duennebier, M. Ewing, D. Lammlein, and Y. Nakamura, Moonquakes, Meteoroids and the State of the Lunar Interior. Abstracts of the Fourth Lunar Science Conference, J. W. Chamberlain and C. Watkins, ed., Lunar Science Institute (Houston), 1973 (in press).

Latham, G., M. Ewing, F. Press, J. Dorman, Y. Nakamura, D. Lammlein, N. Toksoz, F. Duennebier, and A. Dainty, Passive SXismic Experiment, Apollo 17 Preliminary Science Report, NASA SP- , 1973 (in press).

Meissner, R.,G. H. Sutton, and F. K. Duennebier, Moonbeben, Umshaw in Wissenschaft and Tecknik, Heft Y., 111-115, 1971.

Nakamura, Y.,D. Lammlein, G. Latham, M. Ewing, J. Dorman, F. Press, and N. Toksoz, New Seismic Data on the State of the Deep Lunar Interior, Science, 181, 49-51, 1973.

Sutton, G. H., and G. V. Latham, Analysis of a Feedback Controlled Seismometer, J. Geophys. Res., 69, 3865-3882, 1964.

Toksoz, M. N., F. Press, K. Anderson, A. Dainty, G. Latham, J. Dorman, D. Lammlein, G. Sutton, F. Duennebier, and Y. Nakamura, Velocity Structure and Properties of the Lunar Crust, Proc. Third Lunar Science Conf., Vol. 3, MIT Press (Cambridge, Mass.), 1972.

Toksoz, M. N.,F. Press, K. Anderson, A. Dainty, M. Ewing, J. Dorman, G. Latham, D. Lammlein, G. Sutton, F. Duennebier, and Y. Nakamura, Velocity Structure and Properties of the Lunar Crust, The Moon, Vol. 4, No. 3/4, 490-504, 1972.

Toksoz, M. N., F. Press, K. Anderson, A. Dainty, G. Latham, M. Ewing, J. Dorman, D. Lammlein, G. Sutton, F. Duennebier, and Y. Nakamura, Lunar Crust: Structure and Composition, Science, 176, p. 1012-16, 1972.

APPENDIX A

Elapsed Time and the Three-Word Time Code

NOTE: This explanation of the three-word time code was written for internal use at Lamont-Doherty Geological Observatory, and the example used is inaccessible to users of the storage tapes. However, the technique for deriving total elapsed time is still applicable to data obtained from the ALSEP1 long-period storage tapes. Total elapsed time is begun at 0000 hours GMT, 01 Jan and is restarted each year.

Elapsed Time and the Three-Word Time Code:

Total elapsed time in milliseconds is stored in Houston as a single 36-bit 7090 word. The three-word (1130) time code is derived from the 36-bit (7090) word. The procedure is as follows:

1) Take the 7090 word, e.g.,

0011 1100 0000 1111 0011 0111 0000 1111 0011...(1-7090 word)*

and store as three 16-bit words on tape by placing two zeros before each 6 bits, left to right, e.g.,

```
 0    F    0    0
0000 1111 0000 0000 = 3840
 3    C    3    7
0011 1100 0011 0111 = 15415     three 16-bit (1130) words
 3    3    3    3
0000 0011 0011 0011 = 0819
```

(Underlined zeros are artificially introduced and are not part of the original 36-bit 7090 word.) These three 16-bit words are written on ALSEP storage tapes and can be read with the 1130 by either EDIT1 or MAGTA**

2.) The first word of the three-word time code is obtained from the first six non-underlined bits of the first (top) 1130 word. The second word of the three-word time code is obtained from the next 15 non-underlined bits, counting left to right, top to bottom. The third word is obtained from the last 15 non-underlined bits. Thus, the three-word time code in the 1130 would be

```
 0    0    0    F
0000 0000 0000 1111 = 15
```

```
  0    1    E    6
0000 0001 1110 0110 = 486
  7    0    F    3
0111 0000 1111 0011 = 28915
```

(Underlined bits are artificially introduced and should all be zeros.)

3.) The three-word time code is converted back to total elapsed time in milliseconds by multiplying the first word by $(2^{15})^2$, the second word by (2^{15}), and adding these to the third word, e.g.,

$$
\begin{array}{lcr}
15 * 32768^2 & = & 16106127360 \\
486 * 32768 & = & 15925248 \\
28915 * 1 & = & \underline{28915} \\
 & & 16122081523 \quad = \text{ elapsed time in milliseconds}
\end{array}
$$

4.) The time in days, hours, minutes, and seconds is found by finding the largest day which will fit into the elapsed time, then the largest hour, and finally the largest minute. The remainder is in milliseconds, e.g.,

$$
\begin{array}{lcrl}
 & & 16122081523 & \\
186 * 24 * 60 * 60 * 1000 & = & \underline{16070400000} & = \text{ day } 186 \\
 & & 51681523 & \\
14 * 60 * 60 * 1000 & = & \underline{50400000} & = \text{ hour } 14 \\
 & & 1281523 & \\
21 * 60 * 1000 & = & \underline{1260000} & = \text{ min. } 21 \\
 & & 21523 & = \text{ sec. } 21.523
\end{array}
$$

i.e., $186^D 14^H 21^M 21.523^S$

A Fortran routine called EDIT3 has been written to convert the three 16-bit 1130 words (read backwards from ALSEP tape with MAGTA, data convert off) into the three-word time code.

*The example is taken from the start of the third physical record on ALSEP tape 51571 (first physical record after the two header records).

**The output from EDIT1 is the three-word time code. The output from MAGTA is the three 16-bit 1130 words described in step 1.) Note that the data array from a MAGTA read is backward when compared to an EDIT1 read. Also note that data convert is set off for a MAGTA read.

'09-099C-03A

Lamont-Doherty Geological Observatory Technical Note

SUBJECT: Long-Period Data Storage Tapes from APOLLO XII

DATE: 10 February 1971

PREPARED BY: Bruce Charles Auld

This report is a description of the data processing plan for Apollo XII long-period seismic data storage tapes, and the accompanying listing compiled at Lamont-Doherty Geological Observatory for distribution to the National Space Science Data Center. The first section is a description of the data format for the LP storage tapes. Following this is a discussion of the mechanics of writing these tapes. The last section is a brief description of the Apollo XII long-period seismometers, their response curve, and the method by which these data are transmitted from the moon to the earth. Any modifications and/or additions to this data processing plan will be published as addenda when required.

Contents

Introduction

1. Data Format on Storage Tapes

2. Mechanics of Writing Storage Tapes

3. Instrumental Response and Data Transmission from the Apollo XII Passive Seismic Experiment

Appendix A - Elapsed Time and the Three-Word Time Code

Appendix B - Two Problems Regarding Apollo XII Long-Period Data

Introduction

The data contained on the long-period event storage tapes are compiled from the ALSEP 1 PSE* data tapes which are distributed by the Manned Spacecraft Center, MSC, in Houston to the Principal Investigators for the Passive Seismic Experiment. All long-period data of seismologic interest contained on the MSC tapes are condensed and transferred to the long-period event storage tapes. These storage tapes are then made available to other interested investigators.

*ALSEP 1 PSE = Apollo Lunar Surface Experiments Package #1, Passive Seismic Experiment. This package was deployed during the Apollo XII flight.

1. Data Format of Storage Tapes

Each storage tape contains all long-period event data for a time interval specified on the label attached to the face of the tape reel. The data on a storage tape is divided into a series of events which are written in chronological order. Each event is numbered, starting with event number 1, and subdivided into data records which are also numbered, starting with data record number 0, for each event. Each data record is made up of data frames with 16 data words per frame. The data for each event begin approximately 5 minutes before the start of the event and continue 10 minutes after the event has disappeared into the background.

To simplify numbering of the events and data records, each data record is preceded by a 9-word list record. This list record contains all information pertinent to the following data record. The 9 words of the list record contain the following information:

LIST(1) = Event number

LIST(2) = Tape number

LIST(3) = Data record number for the event

LIST(4) - LIST(7) = Start time in days, hours, mins, and secs for the event (not the record).

LIST(8) = relative maximum amplitude of the event (15 is a very small event, 100 is a large, natural event). This is useful only as a guide, and has no quantitative significance. Some list records for events in 1970 do not contain a meaningful number in LIST(8).

LIST(9) = number of words in the data record which follows

The data record which follows is of variable length, but the last list record word gives the number of words to be read in the data record.

Data records are a maximum of 2048 words and a minimum of 16 words in length. They are divided into frames with 16 words per frame. The frame contains the three-word time code, the bit error rate, and four words each of long-period X, Y, and Z data in the following order:

DATA(1) - DATA(3) = three-word time code corresponding to total elapsed time from the first of the year to the beginning of the first data words in the frame (see Appendix A for an explanation of the three-word time code).

DATA(4) = bit error rate. (This is usually zero, but for a frame with erroneous data it may be non-zero).

DATA(5) - DATA(8) = long-period X data

DATA(9) - DATA(12) = long-period Y data

DATA(13) - DATA(16) = long-period Z data

DATA(17) - DATA(32) = second frame

.

.

.

DATA(16 * N-15) - DATA(16 * N) = N th frame where N = 1, 2, ... NN; and NN is LIST(9)/16.

Each frame is supposed to be 0.603773 secs in duration so that a full data record of 128 frames contains 77.283 seconds of long-period data. However, there are occasional data records for which erroneous time has been read from the MSC original tapes and the total elapsed time may be either too long or too short, e.g., tape 1, event 8, batches 4 and 5. See Appendix B for a brief discussion of problems arising from erroneous data contained on the long-period event storage tapes. It is important to point out that erroneous data are usually caused by transmission difficulties between the moon and receiving facilities on earth. These

erroneous data have not been corrected on either the MSC original tapes or the storage tapes and consequently must be eliminated by the individual user.

The dynamic range of the long-period data is 0 to + 1023 with an average D.C. value for each channel of approximately 512 digital units. The expected values of the three-word time code are 0 to 27 for the first word and 0 to 32,767 for words 2 and 3. Erroneous data may cause the first word of the time code to exceed 27, but these data may be ignored.

Accompanying each data storage tape sent to the Space Science Data Center at Goddard is a computer generated listing which gives start, end, and elapsed times for each data record on that tape. The start and end times are calculated from the three-word time codes at the beginning and end frames of each data record and correspond to the start time of these frames. The elapsed time is the difference between the start and end times. Note that the actual elapsed time for the data record is the calculated elapsed time plus 0.604 seconds for the duration of the last frame. A normal calculated elapsed time is 76.678 secs for a full record or actual elapsed time of 77.282 secs, i.e., 128 frames x 0.603773 secs per frame. Variations of $\pm$ 2 or 3 milliseconds are acceptable, but frames which contain larger deviations from the elapsed time than this will usually be found to contain a data drop-out or some other form of erroneous data.

2. Mechanics of Writing Storage Tapes

Data records are written on magnetic tape via an unformatted subroutine* with data convert on and data translate off, (see IBM form A22-6866-4, Component Description of Magnetic Tape Units, 2400-Series, for a discussion of conversion and translation features). A ~~seven~~ nine-track head with odd parity and ~~800~~ 6250 b.p.i. density are employed. The storage tapes are generated on an IBM 2415 Model 1 tape drive connected to an IBM 1130 computer. All words in a data record are 16-bit one word integers written in standard BCDIC.

A data record is written as follows:

1.) the data array is entered, starting at the high order bit of the last word in the array, into a data channel, 2.) data convert takes the first three 8-bit bytes and converts them into four 6-bit tape characters, 3.) these four tape characters are then written on the magnetic tape, 4.) the next 24 bits are converted as in step 2 and written as in step 3, etc. Note that since the 1130 has a 16-bit word, the first data word is written on the first 2 2/3 tape characters, the second data word is written on the next 2 2/3 tape characters, and the third data word is written on the next 2 2/3 tape characters, i.e., three data words for every eight tape characters or six bytes.

The flow of data is illustrated in Figure 1. Figure 1A shows the nine list record words constituting the first record on ALSEP 1 long-period event storage #1 as they appear in core in the 1130. Figure 1B shows how the bits for the last three data words of this array are written on tape as eight tape characters or six bytes. The next three data words are written in the next eight tape characters. After all nine list record words have been written on tape, there is an inter-record gap before the next data record. Note that since LIST(9) = 2048, the next data record will contain 2048 words. The data record is written in the same manner

the same manner as the list record.

*This subroutine (MAGTA) writes a data record in reverse order, i.e., the last data word is written first and the first data word is written last.

Core Location*	Binary Contents (16 bits/wd)	Hex	Decimal	Word No. (LIST coefficients)
01FE	0000 1000 0000 0000	0800	2048	9
01FF	0000 0000 0000 0000	0000	0	8
0200	0000 0000 0001 1110	001E	30	7
0201	0000 0000 0000 1100	000C	12	6
0202	0000 0000 0001 0110	0016	22	5
0203	0000 0001 0100 0100	0144	324	4
0204	0000 0000 0000 0000	0000	0	3
0205	0000 0000 0000 0001	0001	1	2
0206	0000 0000 0000 0001	0001	1	1

Figure 1A. 1130 Data Array as It Appears In Core for the First List Record on Tape #ALSEP1LP01.

[0000 1000 0000 0000][0000 0000 0000 0000][0000 0000 0001 1110] 3X16 = 48 bits
1130 wd. 1 1130 wd. 2 1130 wd. 3

[0000 1000][0000 0000][0000 0000][0000 0000][0000 0000][0001 1110] 6X8 = 48 bits
byte 1 byte 2 byte 3 byte 4 byte 5 byte 6

[000010][000000][000000][000000][000000][000000][000000][011110] 8X6 = 48 bits
t.c.1 t.c.2 t.c.3 t.c.4 t.c.5 t.c.6 t.c.7 t.c.8

Figure 1B. Conversion of First Three 1130 Words from Core, (i.e., LIST(9)-LIST(7)), into 6 Bytes and 8 Tape Characters

*Core start is arbitrarily chosen

3. Data Transmission from the ALSEP 1 PSE

This brief description of the ALSEP 1 seismometers and the method of data transmission from the APOLLO 12 site to MSC in Houston is given so that users of these data may understand the relationship between actual ground motion on the moon and the digital numbers which appear on the data tapes.

A response curve which is applicable to all three long-period seismometers is given in Figure 2. This curve gives ground displacement in digital units for periods from 0.1 seconds to 1000 seconds on a log-log scale. The peaked curve labelled APOLLO 12 is the mode in which these long-period data are recorded. The ALSEP 1 is unstable in the nominal mode and consequently this mode has not been used since the early days of the experiment. The ALSEP 1 amplifiers may be commanded to reduce the gains by -10, -20, and -30 db from the magnification shown. However, normal operation is at 0 db and any reductions in gain will be noted in the tape event listings supplied with ALSEP 1 event storage tapes.

The ALSEP data transmitter generates an S-Band carrier frequency which is received at any of several NASA recording stations on earth. The r.f. bit stream and time-of-day (GMT) are recorded on range tapes. The time is generated at the range station and represents the time which the signal was received on earth. The range tapes are converted to computer compatible tapes at the Manned Spacecraft Center in Houston. This computer compatible tape is used to produce the PSE tapes which are distributed to Lamont-Doherty Geological Observatory. The tapes supplied to L-DGO have been corrected for some data drop outs; however, there still remain some erroneous data on these tapes.

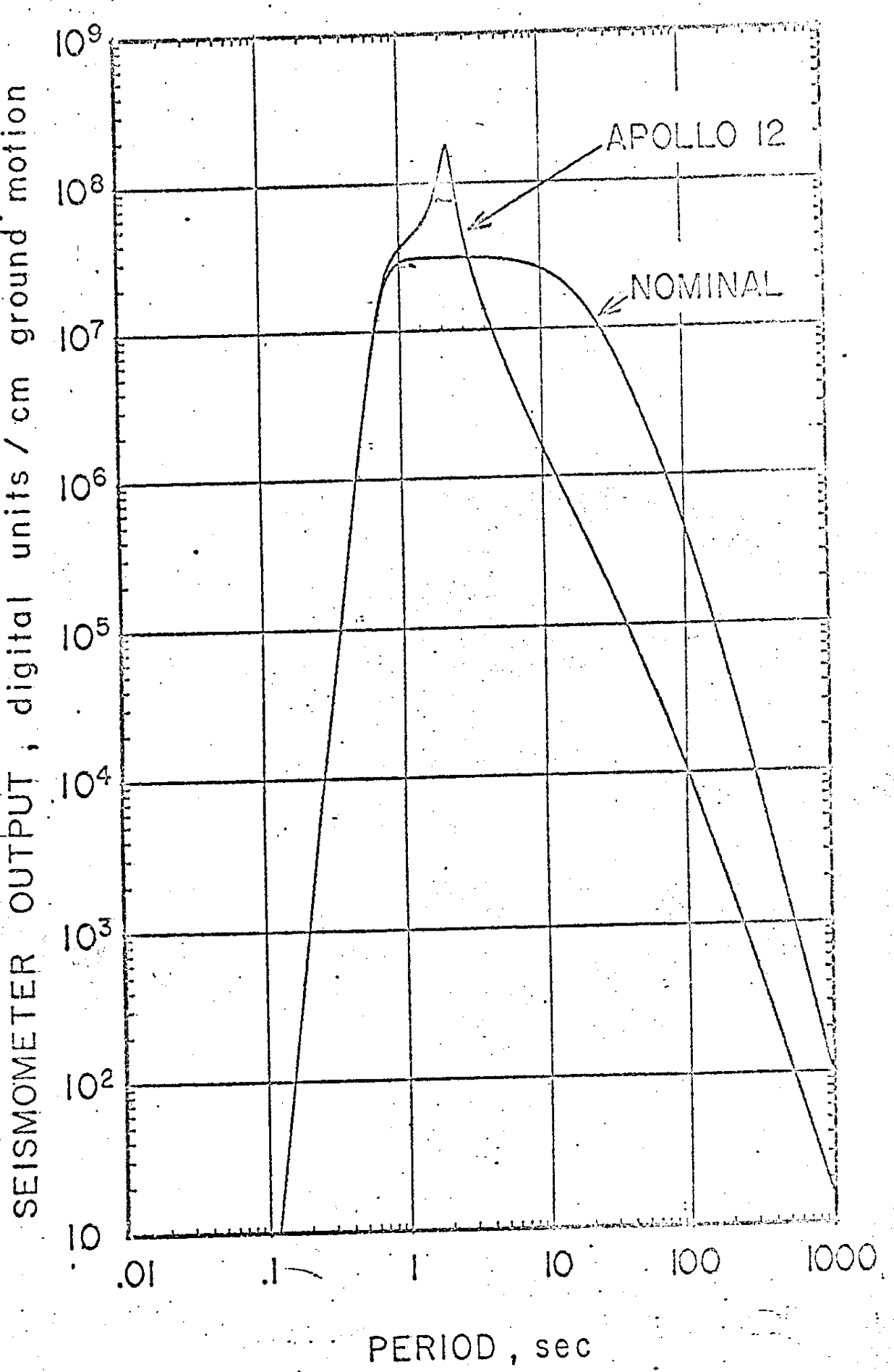
APOLLO 12
NOMINAL
SEISMOMETER OUTPUT , digital units / cm ground motion
10^9
10^8
10^7
10^6
10^5
10^4
10^3
10^2
10
.01
.1
1
10
100
1000
PERIOD , sec

—figure 2

The event storage tapes supplied to the National Space Science Data Center contain selected intervals of data copied at Lamont from the PSE tapes. Accompanying the event storage tapes sent to the data center at Goddard is a computer generated listing which gives the start, end, and elapsed times of each data record and event on the tapes.

Data Set Catalog # 254

RECORD 1 OF FILE 1
LENGTH = 24 BYTES

1(1) 476225674722 214362254721 216162050007 606001110703

prompt > APOLLO
> 175723125420
> 195.598
> Day

DR/DS004572

7/14/73 - 7/15/73

RECORD 2 OF FILE 1
LENGTH = 4860 BYTES

1(	1)	175723125420	240236000000	704403542420	403441044034	403441044034	075433547334	403441044034	000040344104
9(	49)	403400000000	175723126554	240236140000	704403542430	403441044034	404041044034	153040104444	404041044034
17(	97)	000040344110	403400000000	175723127707	240236000000	704403542440	403441044034	403441044034	144033547334
25(	145)	403441044034	000040344110	403400000000	175723131043	240236100000	704403542450	403441104034	403441104034
33(	193)	064040044444	403441104034	000040344110	403400000000	175723132177	240236140000	704403542460	403441044034
41(	241)	403441044034	001433547334	404041044034	000040404104	403400000000	175723133333	240236040000	704403542470
49(	289)	403441044034	403441044034	001440044444	403441044034	000040344104	403400000000	175723134466	240236140000
57(	337)	704403542500	403441044034	404041104030	000033547334	404041104034	000040404110	403400000000	175723135622
65(	385)	240236000000	704403542510	404041044034	404041044034	061040044444	404041044034	000040344104	403400000000
73(	433)	175723136756	240236000000	704403542520	403441044034	403441044034	145033547334	403441044034	000040344104
81(	481)	403400000000	175723140112	240236000000	704403542530	403441044030	403441044030	063040044444	403441044034
89(	529)	000040404104	403400000000	175723141246	240276140000	704403542540	404041044034	404041044034	000033547334
97(	577)	404041044034	000040344110	403400000000	175723142401	240236140000	704403542550	403441044034	403441044034
105(	625)	000040044444	403441044034	000040344104	403400000000	175723143535	240236140000	704403542560	404041044034
113(	673)	404041044034	062433547334	404041044034	000040344104	403000000000	175723144671	240236000000	704403542570
121(	721)	403441044030	403441044034	075040044444	403441104034	000040344110	403400000000	175723146025	240236040000
129(	769)	704403542600	403441044034	403441044034	061433547334	403441044034	000040344104	403400000000	175723147160
137(	817)	240236100000	704403542610	404041044034	404041044034	063040044444	404041044034	000040344104	403400000000
145(	865)	175723150315	240236000000	704403542620	403441044034	403441044034	146433547334	403441044034	000040344104
153(	913)	403400000000	175723151450	240236140000	704403542630	403441044034	403441044034	000040044444	403441044034
161(	961)	000040404104	403400000000	175723152603	240236000000	704403542640	404041044034	404041044034	177433547334
169(	1009)	403441044034	000040344104	403000000000	175723153737	240236100000	704403542650	403441044034	404041044034
177(	1057)	002040044444	404041044034	000040404104	403400000000	175723155073	240236140000	704403542660	403441044034
185(	1105)	403441044034	123433547334	403441044034	000040344104	403400000000	175723156227	240236040000	704403542670
193(	1153)	403441044034	403441044034	000040044444	403441044034	000040344104	403400000000	175723157363	240236140000
201(	1201)	704403542700	403441044034	403441044030	046033547334	403441044030	000040344110	403000000000	175723160516
209(	1249)	240236000000	704403542710	404041104030	404041104030	000040044444	404041104030	000040404110	403000000000
217(	1297)	175723161653	240236000000	704403542720	404041044034	404041044034	063433547334	404041044034	000040404104
225(	1345)	403400000000	175723163006	240236000000	704403542730	403441044034	403441044034	154040044444	403441044034
233(	1393)	000040344104	403400000000	175723164142	240276140000	704403542740	403441044034	403441044034	130033547334
241(	1441)	403441104030	000040344110	403000000000	175723165275	240236140000	704403542750	403441104030	403441104030
249(	1489)	066040044444	403441104034	000040344104	403400000000	175723166431	240236140000	704403542760	403441044034
257(	1537)	403441044034	072033547330	404041044034	000040344104	403400000000	175723167565	240236000000	704403542770
265(	1585)	403441044034	403441044034	114040044444	403441044034	000040404104	403400000000	175723170721	240236040000
273(	1633)	704403543000	404041044034	403441104034	106433547334	403441104034	000040344110	403400000000	175723172054
281(	1681)	240236100000	704403543010	403441104034	403441104030	155040044444	403441044030	000040344104	403400000000
289(	1729)	175723173211	240236000000	704403543020	403441004034	403441004034	012033547334	404041044034	000040404104
297(	1777)	403400000000	175723174344	240236140000	704403543030	404041044034	404041044034	043440044444	403441044034
305(	1825)	000040344110	403400000000	175723175500	240236000000	704403543040	403441104030	403441104034	002033547334
313(	1873)	403441104034	000040344110	403400000000	175723176633	240236100000	704403543050	403441044034	403441044034
321(	1921)	062440044444	403441044034	000040404100	403400000000	175723177767	240236140000	704403543060	404041004034
329(	1969)	403441044034	061033547334	403441044034	000040344104	403400000000	175723201123	240236040000	704403543070
337(	2017)	403441044034	403441044030	070440044444	403441044030	000040344104	403000000000	175723202257	240236140000
345(	2065)	704403543100	403441044030	403441044034	147033547334	403441044034	000040344104	403400000000	175723203412
353(	2113)	240236000000	704403543110	403441044034	404041044034	000040044444	404041044034	000040344104	403400000000
361(	2161)	175723204547	240236000000	704403543120	403441044034	403441044030	000033547330	403441104030	000040344110
369(	2209)	403000000000	175723205702	240236000000	704403543130	403441044030	403441044034	000040044444	404041044034
377(	2257)	000040404104	403400000000	175723207036	240276140000	704403543140	404041044034	403441044034	100433547334
385(	2305)	403441044034	000040344104	403400000000	175723210171	240236140000	704403543150	403441044034	403441044034
393(	2353)	144040044444	403441044034	000040344104	403400000000	175723211325	240236140000	704403543160	403441044034
401(	2401)	403441044034	103433547334	403441044034	000040344104	403400000000	175723212462	240236000000	704403543170
409(	2449)	404041044034	404041044030	073440044444	403441044030	000040344104	403000000000	175723213615	240236040000

196

RECORD 1470 OF FILE 1
LENGTH = 4860 BYTES

1(	1)	176434277154	240276140000	704503542640	405040604034	405040604034	177426344250	405040604034	000040504060
9(	49)	403400000000	176434300310	240236140000	704503542650	405040604034	405040604034	002035505274	405040604034
17(	97)	000040504060	403400000000	176434301444	240236140000	704503542660	405040604030	405040604030	123426344250
25(	145)	405440544030	000040544054	403000000000	176434302600	240236000000	704503542670	405440604034	405440604034
33(	193)	000035505274	405440604034	000040544060	403400000000	176434303733	240236040000	704503542700	405440604034
41(	241)	405440604034	052426344250	405040604034	000040504060	403400000000	176434305067	240236100000	704503542710
49(	289)	405040604034	405040604034	000035505274	405040604034	000040504060	403000000000	176434306223	240236000000
57(	337)	704503542720	405040604030	405440604030	064426344250	405440604030	000040544060	403000000000	176434307357
65(	385)	240236140000	704503542730	405440604034	405440604034	152435505274	405440604034	000040544060	403400000000
73(	433)	176434310512	240236000000	704503542740	405440604034	405040604034	130026344250	405040604034	000040504060
81(	481)	403400000000	176434311646	240236100000	704503542750	405040604034	405440604034	067035505274	405440604030
89(	529)	000040544060	403000000000	176434313003	240236140000	704503542760	405440604030	405440604034	073026344250
97(	577)	405440604034	000040544060	403400000000	176434314137	240236040000	704503542770	405440604034	405440604034
105(	625)	115035505274	405040604034	000040504060	403400000000	176434315272	240236140000	704503543000	405040604034
113(	673)	405040604034	107426344250	405040604034	000040504060	403000000000	176434316426	240236000000	704503543010
121(	721)	405040604030	405440604034	154435505274	405440604030	000040544060	403000000000	176434317562	240236000000
129(	769)	704503543020	405440604030	405440604030	012026344250	405440604034	000040544060	403400000000	176434320716
137(	817)	240236000000	704503543030	405440604034	405440604034	040435505274	405440604034	000040544060	403400000000
145(	865)	176434322051	240276140000	704503543040	405040604034	405040604034	002026344250	405040604030	000040504060
153(	913)	403000000000	176434323205	240236140000	704503543050	405040604030	405440604030	062435505274	405440604030
161(	961)	000040544060	403000000000	176434324341	240236140000	704503543060	405440604034	405440604034	062426344250
169(	1009)	405440604034	000040544060	403400000000	176434325475	240236000000	704503543070	405440604034	405440604034
177(	1057)	071035505274	405440604034	000040544060	403400000000	176434326630	240236040000	704503543100	405040604034
185(	1105)	405040604030	146426344250	405040604030	000040504060	403000000000	176434327764	240236100000	704503543110
193(	1153)	405440604030	405440604030	000035505274	405440604034	000040544060	403400000000	176434331120	240236000000
201(	1201)	704503543120	405440604034	405440604034	000026344250	405440604034	000040544060	403400000000	176434332254
209(	1249)	240236140000	704503543130	405440604034	405440604034	000035505274	405440604034	000040504060	403400000000
217(	1297)	176434333410	240236000000	704503543140	405040604030	405440604034	102026344250	405440604034	000040544060
225(	1345)	403400000000	176434334543	240236100000	704503543150	405440604034	405440604034	145035505274	405440604034
233(	1393)	000040544060	403400000000	176434335677	240236140000	704503543160	405440644034	405440644034	104426344250
241(	1441)	405440604034	000040544060	403400000000	176434337033	240236040000	704503543170	405040604034	405040604034
249(	1489)	073435505274	405440604034	000040544054	403400000000	176434340166	240236140000	704503543200	405440544034
257(	1537)	405440604034	036426344250	405440604030	000040544060	403000000000	176434341322	240236000000	704503543210
265(	1585)	405440604030	405440604030	000035505274	405440644034	000040544064	403400000000	176434342456	240236000000
273(	1633)	704503543220	405440644034	405040644034	104426344250	405040604034	000040544060	403400000000	176434343612
281(	1681)	240236000000	704503543230	405440604034	405440544034	073035505274	405440544034	000040544054	403400000000
289(	1729)	176434344746	240276140000	704503543240	405440604034	405440604034	006426344250	405440604030	000040544060
297(	1777)	403000000000	176434346101	240236140000	704503543250	405440604030	405440604030	027435505274	405440604034
305(	1825)	000040544060	403400000000	176434347235	240236140000	704503543260	405440604034	405040604034	000026344250
313(	1873)	405040604034	000040504060	403400000000	176434350371	240236000000	704503543270	405040604034	405440604034
321(	1921)	126435505274	405440604034	000040544060	403400000000	176434351525	240236040000	704503543300	405440604030
329(	1969)	405440604030	164426344250	405440604034	000040544060	403400000000	176434352660	240236100000	704503543310
337(	2017)	405440604034	405040604034	000035505274	405040604034	000040504060	403400000000	176434354014	240236000000
345(	2065)	704503542000	405040604034	405040604034	000026344250	405040604034	000040544060	403400000000	176434355150
353(	2113)	240236140000	704503542014	405440604034	405440604034	136435505274	405440604030	000040544060	403000000000
361(	2161)	176434356304	240236000000	704503542020	405440604030	405440604030	006426344250	405440604030	000040544060
369(	2209)	403000000000	176434357437	240236100000	704503542030	405440604030	405040604034	171035505274	405040604034
377(	2257)	000040504060	403400000000	176434360573	240236140000	704503542044	405440604034	405440604034	075026344250
385(	2305)	405440604034	000040544060	403400000000	176434361727	240236040000	704503542050	405440604034	405440604030
393(	2353)	145035505274	405440604030	000040544060	403000000000	176434363063	240236140000	704503542060	405440604030
401(	2401)	405440604030	175426344250	405440604030	000040544060	403000000000	176434364216	240236000000	704503542070
409(	2449)	405040604034	405440604034	060435505274	405440604034	000040544060	403400000000	176434365352	240236000000

RECORD 1 OF FILE 2
LENGTH = 24 BYTES

1(1) 476225674722 214362254721 216162050007 606001110703

RECORD 2 OF FILE 2
LENGTH = 4860 BYTES

196

1(	1)	176434604065	240236140000	704403542470	405040604034	405440604034	001435505274	405440604034	000040544060
9(	49)	403400000000	176434605221	240236000000	704403542500	405440604034	405440604034	000026344244	405440604034
17(	97)	000040544060	403400000000	176434606355	240236100000	704403542510	405440604034	405440604034	032035505274
25(	145)	405440604034	000040504060	403000000000	176434607511	240236140000	704403542520	405440604030	405440604034
33(	193)	147426344244	405440604034	000040544060	403400000000	176434610644	240236040000	704403542530	405440604034
41(	241)	405440604034	063435505274	405440604034	000040544060	403400000000	176434612000	240236140000	704403542540
49(	289)	405440604034	405440604034	000026344244	405440604034	000040544060	403400000000	176434613134	240236000000
57(	337)	704403542550	405440604030	405440604030	000035505274	405440604034	000040544060	403400000000	176434614267
65(	385)	240236000000	704403542560	405440604034	405440604034	063426344244	405440604034	000040544060	403400000000
73(	433)	176434615423	240236000000	704403542570	405440604034	405440604034	076035505274	405440604034	000040544060
81(	481)	403400000000	176434616557	240276140000	704403542600	405440604034	405440604034	062026344244	405440604034
89(	529)	000040544060	403400000000	176434617713	240236140000	704403542610	405440604034	405440604034	064035505274
97(	577)	405440604034	000040544060	403000000000	176434621047	240236140000	704403542620	405440604030	405440604030
105(	625)	146426344244	405440604034	000040544060	403400000000	176434622202	240236000000	704403542630	405440604034
113(	673)	405440604034	000035505274	405440644034	000040544064	403400000000	176434623336	240236040000	704403542640
121(	721)	405440604034	405440604034	177426344244	405440604034	000040544060	403400000000	176434624472	240236100000
129(	769)	704403542650	405440604034	405440604034	002035505274	405440604034	000040544060	403400000000	176434625625
137(	817)	240236000000	704403542660	405440604034	405440604034	123426344244	405440604030	000040504060	403000000000
145(	865)	176434626761	240236140000	704403542670	405440604030	405440604034	000035505274	405440604034	000040544060
153(	913)	403400000000	176434630115	240236000000	704403542700	405440604034	405440604034	052426344244	405440604034
161(	961)	000040544060	403400000000	176434631251	240236100000	704403542710	405440604034	405440604034	000035505274
169(	1009)	405440604034	000040544060	403000000000	176434632405	240236140000	704403542720	405440604030	405440604034
177(	1057)	064426344244	405440604034	000040544060	403400000000	176434633540	240236040000	704403542730	405440604034
185(	1105)	405440604034	152435505274	405440604034	000040544060	403400000000	176434634674	240236140000	704403542740
193(	1153)	405440604034	405440604034	130026344244	405440604034	000040544060	403400000000	176434636030	240236000000
201(	1201)	704403542750	405440604034	405440604034	067035505274	405440604034	000040544060	403400000000	176434637163
209(	1249)	240236000000	704403542760	405440604034	405440604034	073026344244	405440604030	000040544060	403400000000
217(	1297)	176434640317	240236000000	704403542770	405440604034	405440604034	115035505274	405440604034	000040544060
225(	1345)	403400000000	176434641453	240276140000	704403543000	405440604034	405440604034	107426344244	405440604034
233(	1393)	000040544060	403400000000	176434642607	240236140000	704403543010	405440604034	405440604034	155035505274
241(	1441)	405440604034	000040544060	403000000000	176434643743	240236140000	704403543020	405440604030	405440604034
249(	1489)	012026344244	405440604034	000040544060	403400000000	176434645076	240236000000	704403543030	405440604034
257(	1537)	405440604034	040435505274	405440604034	000040544060	403400000000	176434646232	240236040000	704403543040
265(	1585)	405440604034	405440604034	002026344244	405440604034	000040544060	403000000000	176434647366	240236100000
273(	1633)	704403543050	405440604030	405440604030	062435505274	405440604030	000040544060	403400000000	176434650521
281(	1681)	240236000000	704403543060	405440604034	405440604034	063026344244	405440604034	000040544060	403400000000
289(	1729)	176434651655	240236140000	704403543070	405440604034	405440604034	071035505274	405440604034	000040544060
297(	1777)	403400000000	176434653011	240236000000	704403543100	405440604034	405440604034	146426344244	405440604034
305(	1825)	000040544060	403400000000	176434654145	240236100000	704403543110	405440604030	405440604030	000035505274
313(	1873)	405440604030	000040544060	403000000000	176434655300	240236140000	704403543120	405440604030	405440604030
321(	1921)	000026344244	405440604034	000040544060	403400000000	176434656434	240236040000	704403543130	405440604034
329(	1969)	405440604034	000035505274	405440604034	000040544060	403400000000	176434657570	240236140000	704403543140
337(	2017)	405440604034	405440604034	101426344244	405440604034	000040544060	403400000000	176434660724	240236000000
345(	2065)	704403543150	405440604030	405440604030	145035505274	405440604030	000040544060	403000000000	176434662057
353(	2113)	240236000000	704403543160	405440604034	405440604034	104426344244	405440604034	000040544060	403400000000
361(	2161)	176434663214	240236000000	704403543170	405440604034	405440604034	073435505274	405440604034	000040544060
369(	2209)	403400000000	176434664347	240276140000	704403543200	405440604034	405440604034	036426344244	405440604034
377(	2257)	000040544060	403000000000	176434665503	240236140000	704403543210	405440604034	405440604034	000035505274
385(	2305)	405440604034	000040544060	403000000000	176434666637	240236140000	704403543220	405440604030	405440604030
393(	2353)	104426344244	405440604034	000040544060	403400000000	176434667773	240236000000	704403543230	405440604034
401(	2401)	405440604034	073035505274	405440604034	000040544060	403400000000	176434671126	240236040000	704403543240
409(	2449)	405440604034	405440604034	006426344244	405440604034	000040544060	403400000000	176434672262	240236100000

APOLLO 14 LM/ALSEP

CONTINUOUS DATA TAPES

71-008C-04A

This data set has been restored. There were originally 31 7-track, 800 BPI tapes written in Binary. There are four restored tapes. The DR tapes are 3480 cartridges and the DS tapes are 9-track, 6250 BPI. The original tapes were created on a 1130 computer and the restored tapes were created on an IBM 9021 computer. The DR and DS numbers along with the corresponding D numbers are as follows:

DR#	DS#	D#	FILES	TIME SPAN	
DR005267	DS005267	D013164	1	07/13/73 - 07/14/73	
		D013383	2	07/14/73 - 07/15/73	
		D013165	3	07/15/73 - 07/16/73	
		D013162	4	07/16/73 - 07/17/73	
		D012771	5	07/17/73 - 07/18/73	
		D013166	6	07/18/73 - 07/19/73	(a)
		D012770	7	07/19/73 - 07/20/73	
		D013161	8	07/20/73 - 07/21/73	(b)
DR005268	DS005268	D012768	1	07/21/73 - 07/22/73	
		D013286	2	07/22/73 - 07/23/73	
		D013288	3	07/23/73 - 07/24/73	
		D013287	4	07/24/73 - 07/25/73	
		D013526	5	07/25/73 - 07/26/73	
		D013385	6	07/26/73 - 07/27/73	
		D013926	7	07/27/73 - 07/28/73	
		D013929	8	07/28/73 - 07/29/73	(c)
DR005269	DS005269	D013285	1	07/29/73 - 07/30/73	
		D014019	2	07/30/73 - 07/31/73	(d)
		D013284	3	07/31/73 - 08/01/73	
		D012769	4	08/01/73 - 08/02/73	
		D013381	5	08/02/73 - 08/03/73	
		D013921	6	08/03/73 - 08/04/73	
		D013289	7	08/04/73 - 08/05/73	(e)
		D013924	8	08/05/73 - 08/06/73	(f)
DR005270	DS005270	D013927	1	08/06/73 - 08/07/73	
		D013384	2	08/07/73 - 08/08/73	(g)
		D013928	3	08/08/73 - 08/09/73	
		D013923	4	08/09/73 - 08/10/73	
		D014020	5	08/10/73 - 08/11/73	
		D013922	6	08/11/73 - 08/12/73	(h)
		D013925	7	08/12/73 - 08/13/73	

(a) D013166 : Read error occurred in record 2 of file 1.
(b) D013161 : Read errors occurred in records 21, 251 of file 1.
(c) D013929 : Read error occurred in record 373 of file 1.
(d) D014019 : Read error occurred in record 1587 of file 1.
(e) D013289 : Read errors occurred in records 58, 59, 421, 422, 424 of file 1.
(f) D013924 : Read errors occurred in records 15, 270, 835 of file 1.
(g) D013384 : Read errors occurred in records 5, 7 of file 1.

(h) D013922 : Read errors occurred in records 380, 381 of file 1.

```
9F2C15DE7463C959D2471C85009C300491C3                                    REC     1, LENGTH    18

9F2C15DE7463C959D2471C85009C300491C3                                    REC     2, LENGTH    18

3EADFD73[illegible]502000000E240EC4888488848879C8487388488188448448448448884879C8487388488188488480008488048   REC     3, LENGTH  7290
48B2C84884479C8447388448188448448448448484479C848738844818844844483EADFD98C502000000E240EC4908488488487 9
C8487348488188488488E448448448487 9C8487388488188488482808483E8848708848848 79C8447388448188448448448448
84879C8487388488188488483EADFDBE7502000000E240EC49884884884479C84473C8448188448448488488848879C8487
3884881884884824484880484 4B2C8448447 9C8487388488188488488448484479C8487388488188488483EADFDE4350200
0000E240EC4A0848848848879C8487388488188488488488488848879C8487388488188488483448483E8848708848848879C
8487388488188448448448448484879C8487388488188488483EADFE09F502000000E240EC4A8848848848879C8487388488188
4888488448488488487 9C8487388488188488482DC844804844B2C84884479C8447388448188488488488488848879C84873884
88188448443EADFE2FA502000000E240EC4B0844848848879C8487388488188488488488488848879C8487388488188488488
0048483E8844708844848479C8447388448188448448488488848879C8487388488188488483EADFE55650 2000000E240EC4B88
4884484479C8487388488188488488448448448488 79C8487388488188488400C8448048448B2C84484479C8447388448188 4
8848848848848798844738848818848848 3EADFE7B2502000000E240EC4C0844848848879C8447388448188448448488488848
84879C8487388488188448440108443E8844708848848879C8487388488188488488488488848879C8447388448188448443EAD
FEA0E502000000E240EC4C8848848848879C8487388448188448448488488848848879C8487388488188488488004844804844B2
C84884879C8487388488188488488448448448479C8487388488188488483EADFEC6A502000000E240EC4D0844848848 7A0848
7388488188488448448448448484879C8487388488188488481 0C8483E8844708844848479C8447 3C8448188488488488488447
9C8447388448188488483EADFEEC5502000000E240EC4D8848848848479C8447388448188448488488488488848879C8487388 4
4818844844320848804848B2C84884479C8447388448188448488488488488848879C8487388448188448443EADFF12150 2000000
E240EC4E0848848848879C8487388488188448448448448488848879C8487388488188488481DC8483E8844708848848879C8487
3884881884884848848848848848848848848848848848848848848848848848848848848848848848848848848848848848848
443E8844708848848879CE8487388488188488488488488848879C8447388448188448443EADFF8345020000 00E240EC4F884884
884879C8487388488188488488488488488848879C8487388488188488480008488C4848B2C84884879C8487388488188488488
8448448448479C8447388488188448443EADFFA90502000000E240EC5008488488848879C8487388488188488488448448448487
9C8487388488188448C84C0008483E8848708848848479C8487388488188488488488488848879C84473C8448188488483EADFFCE
C502000000E240EC508848848848879C8487388488188488448448448479C8487388488188488441EC8448048448B2C844
84879C8487388488188488448448448479C8487388488188488483EADFFF47502000000E240EC5108488488487A08447388
4488188488488448448448448479C8447388488188488488244848 3E8848708848848879C8487388488188448448448448448479884
873884C81884C8483EAE001A3502000000E240EC5188488488479C8447388448188448488488448448448479C8447388448188
84884835C848804848B2C84884879C8487388488188488488488488448479C84473C8448188448443EAE003FF502000000E240
EC5208448448448879C8487388488188448448448448487988487388488188488482288483E8848708848848479884473884
88188488488488488488479C8487388488188448443EAE0065B502000000E240EC5288448488487 9C8487388448188448448448
84884884879C8487388488188488483D0844804844B2C84484879C8487388488188488488488448448479C8447388448188448
483EAE008B6502000000E240EC53084884C84879C8487388488188488488448488448448479C8447388448188488480 0C8483E
8848708848848879C8487388448188448448448448884879C8487388488188448448448448448479C84473884881884884 2A8844804844B2C84484479C8447388488188488488488
4884879C8447388448188448483EAE00D6E502000000E240EC5408488488487 9C8487388488188488488448448448479C84
4738848818848848000 8483E8848708848848879C8487388488188448448448448448479C8487388488188488483EAE00FCA502
000000E240EC54884884 84879C8487388488188488488488488488848879C8487388448188448441348448048 44B2C8488487
9884873C8488188488488448448448479884873884881884884 83EAE01225502000000E240EC5508488488487 9C8487388488 1
8848848448448448448447A0848738848188488483208483E8844708848848479C8447388448188488488488488848879C848738
8448188448443EAE0148150 2000000E240EC5588488488487 9C8487388488188488488488488848479C8447388448188448
441F4848048488 2C84884879C8487388488188488448448448484879C8487388488188488483EAE016DD502000000E240EC56
0848848848879C8487388488188488448448448448484479C8487388488188488480 6C8483E8848708848848879C8487388448188
8448448448484884879C8487388488188488483EAE01938502000000E240EC5688488488487 9884873C8488188488488488488
4484479884473C8448188488488018848804844B2C84484079884473884481884484488488848879C8487388488188488483E
AE01894502000000E240EC5708488488487 9C8487388488188488488488488848879C8487388448188448441E08483E8848
7088488487 9C8487348488188488488448448448479C8487388488188488483EAE01DF0502000000E240EC5788488488487 9C8
4473884481884484484484884884879C8487388448188448448214844804844B2C84884879C8487388488188488488448448484
879C8487388488188488483EAE0204C502000000E240EC5808448448487 9C8487388488188488488488448448479C844738
8488188488481D88483E8844708844848479C84473C8488188488488488488848879C8487388488188488483EAE022A75020000
00E240EC5888448448448479C8447388448188448448488448448479C8487388488188488488481E8488048488B2C8488487 9C84
4738844818844844848848848879C8487388488188488483EAE02503502000000E240EC5908488488448479C8447388448188 48
8488488488488487 9C8487348488188488488832C8483E8844708848848479C8447348448188488488448448448479C8487348488
188488483EAE0275F502000000E240EC5988448448448479C8447388488188488488488488488448479C8447388448188488481 1
4848804848B2C84884879C84873C8488188488488448448448479C8487388488188488483EAE029BB502000000E240EC5A0848
84884879C8487388488188488448448448448479C8487388488188488483CC8483E8848708848848879C8487388448188448
448448488487 9C8487388488188488483EAE02C1650200000 0E240EC5A8848848848879C8487388488188488488488488488
```

APOLLO 14
D-13164
C-10202
194-196
7/13/73-7/14/73

See 69-099C-03E

```
9F2C15DE7463C959D2471C85009C300491C3                                                    REC    1. LENGTH    18

9F2C15DE7463C959D2471C85009C300491C3                                                    REC    2. LENGTH    18

3F00633CE502000000E240EC4D883C83C83C7CC83C74083C81C83C83C83C83C83C83C7D083C74084081C83C83C3408388008   REC    3. LENGTH  7290
3C91C83C83C7CC84074084081C83C83C83C83C7CC83C74483C81C83C83C3F0063362A502000000E240EC4E083C84084407C
C83C74483C81C83C83C83C83C8408407CC83C74483C81C83C83C1F883C6F883C9FC83C83C7CC83C74083881C83883C83C840
8407D084074084081C84083C3F0063885502000000E240EC4E88408408407D083C74083C81C83C83C84083C83C83C7CC83C7
4483C81C83C83C0D883C80483C91C8408407CC83C74483C81C83C84084083C83C7CC83C74484081C83C83C3F0063AE150200
0000E240EC4F083C83C83C7CC83C74483C81C84084083C83C83C83C7CC83C74483C81C83C83C13883C6F883C9FC84083C7CC
83C74083C81C83C83C83C83C83C7CC83C74083C81C83C83C3F0063D3D502000000E240EC4F88408408407CC84074083C81C8
3C83C83C8408408407CC84074084081C84084000084080083C91C83C83C7CC83C74084081C83C83C83C83C83C7D083C74483
C81C83C83C3F0063F985020000 00E240EC500840840840 7D083C74083C81883C84083C83C83C83C7CC83C74483C81C83C83C
00083C6F883C9F883C83C7CC83C74083C81C83C83883C83C83C7CC83C74083C81C83C83C3F00641F4502000000E240EC5088
4083C83C7CC83C74084081C84083C84084083C83C7CC83C74083C81C83C83C20883C80083C91C8408407CC83C74483C81C83
C83C83C83C83C7CC83C74483C81C83C8403F0064450502000000E240EC5108408408407C083C74483C81C83C83C84084083C
83C7C883C74483C81C83C83C2608406F88409FC84083C7CC83C74483C81C83C83C83C83C83C7D083C74083C81C83C8403F00
646AC502000000E240EC5188408408 3C7D083C74083C81C83C83C83C83C83C83C7D083C74083881C83883C35C83C80083891
C83C8407D084074084081C83C83C83C83C83C7CC83C74483C81C84083C3F0064907502000000E240EC52083C84083C7CC83C
74483C81C83C84084084083C83C7CC83C74484081C83C83C2108386F88389FC83C83C7CC83C74483C81C83C83C84084083C7
CC83C74483C81C83C83C3F0064B63502000000E240EC52883C83C83C7CC83C74083C81C83C83C83C83C83C7CC83C74083
C81C83C83C3D083C80083C91C83C83C7CC83C74483C81C83C83C83C83C83C7CC83C74883C81C84083C3F0064D8F502000000
E240EC53083C83C8407CC84074884081C84084083C83C83C83C7CC83C74484081C84084000C83C6F883C9F883C83C7CC83C7
4483C81C83C83C83C83C83C7D083C74084081C83C83C3F006501B502000000E240EC53883C83C83C7D084074084081C84083
C83C83C83C83C7CC83C74083C81C83C83C2A883C80483C91C83C83C7CC83C74484081C84084083C8408407CC83C74483C81C
83C8403F006527650200000 0E240EC54083C83C8407CC83C74483C81C83C83C83C83C83C83C7CC83874483881C83C83C0008
3C6F88409FC8408407CC83C74483C81C83C83C83C83C83C7CC83C74483C81C83C8403F00654D2502000000E240EC54883C83
C83C7CC83C74483C81C83C84084084083C83C7CC83C74484081C84083C15C83C80083C91C84083C7CC83C74483C81C83C83C
83C83C83C7D083C74483C81C83C83C3F006572E502000000E240EC55083C83C83C7CC83874483C81C83C83C83C83C83C83C7
CC83C74083C81883C8403408406F88409FC83C83C7CC84074483C81C83C83C83C83C83C7CC83C74483C81C83C83C3F006598
A502000000E240EC55884084083C7CC83C74483C81C83C83C83C83C83C83C7D083C74483C81C83C84021083C80083C91C840
83C7D083C74083C81C84083C83C83C8407D083C74483881C83883C3F0065BE5502000000E240EC56083C83C83C7D08387448
3881C83C83C83C83C8408407CC83C74483881C83883C05C83C6F883C9FC8408407CC83C74483C81C83C83C8408408407C884
074484081C8408403F0065E41502000000E240EC56883C83C83C7C883C74483C81C83C83C83C83C83C83C7CC83C74483C81C
83C8400C484080483C91C8408407CC83C74483C81883C83C84083C83C7CC84074083C81C83C83C3F006609D502000000E240
EC57083C8408407CC84074084081884084084084083C8407CC84074084081C83C83C1FC83C6F883C9F883C83C7CC83C74483
C81C83C83C83C83C8407CC83C74483C81C83C83C3F00662F9502000000E240EC57883C83C83C7CC83C74483C81884084084 0
83C83C83C7CC83C74483C81C84084023083C80083C91C83C83C7D083C74483C81C83C83C83C83C83C7D083C74483C81C8408
403F006655450200000 0E240EC58083C83C83C7CC84074084081C83C83C83C83C83C83C7CC83C74083C81C83C83C1F483C6F
88409FC8408407CC83C74083C81C83C83C83C83C83C7CC83C74083C81C83C83C3F00667B0502000000E240EC58883C83C840
7CC83C74483C81C83C83C83C83C83C7CC83C74483C81C83C84020084080084091C83C83C7CC83C74483C81C83C83C83C8
388387CC83C74483C81C83C83C3F0066A0C502000000E240EC59084084083C7CC83C74084081C84084083C83C83C83C7CC83
C74083C81C83C84032C8406F88409FC84083C7CC83C74083C81883C83C83C8408407CC83C74483C81C83C83C3F0066C67502
000000E240EC59884084083C7CC83C74483C81C84084083C83C8408407CC84074483C81883C84011483C80083C91C83C83C7
CC83C74483C81C83C83C83C83C83C7CC83C74083C81C83C83C3F0066EC3502000000E240EC5A083C83C83C7CC84074084081
C84084083C84084083C7CC83C74083C81883C83C3C883C6F883C9FC83C83C7C883C74483C81C83C83C83C83C83C7CC83C744
83C81C83C83C3F006711F502000000E240EC5A88408408407CC84074484081C84084084083C83C8407CC84074483C81C83C8
3C00C83C80083C91C83C83C7CC83C74484081C83C83C83C83C83C7D084074083C81C83C83C83F006737B502000000E240EC5B
083C84083C7D084074083C81883C84084084084083C7D083C74083C81883C83C2988406F88409F88408407D084074484081C
83C83C83C83C83C7D083874483C81C83C8403F00675D7502000000E240EC5B884083C83C7D084074484081C8408408408408
408407CC84074483C81883C83C06C83C80083C91C8408407CC83C74483C81883C83C83C83C83C7CC84074483C81C83C8383F
0067832502000000E240EC5C083C83C83C7CC83C74083C81884084084084084083C7CC83C74083C81C83C83C31483C6F8840
9F883C83C7CC83C74083C81C83C83C83C8407CC83C74484081C83C8403F0067A8E502000000E240EC5C8840840840 7CC8
4074483C81C83C83C83C83C83C83C7CC83C74484081C8408401F483C80083C91C83C8407CC83C74484081C84083C83C83C83
C7D084074483C81C83C83C3F0067CEA502000000E240EC5D084083C83C7D083C74483C81C83C83C83C83C83C83C7D083C744
83C81C83C83C1F083C6F883C9F883C83C7D083C74083C81C83C83C83C83C83C7CC83C74083C81C83C83C3F0067F455020000
00E240EC5D883C83C83C7CC83C74483C81C83C83C83C83C83C7CC83C74483C81C83C8403548408048409 1C83C83C7CC83
C74883C81C83C83883883C83C7CC83C74483C81C83C83C3F00681A1502000000E240EC5E083C83C83C7D083C74483C81C83C
83C83C8408408407CC83C74483C81C83C83C2E083C6F883C9FC83C83C7CC83C74083C81C83C83C83C83C8387CC83C74083C8
1C83C83C3F00683FD502000000E240EC5E883C83C83C7CC83C74483C81C83C83C83C83C83C7CC83C74483C81C83C83C25
883C80483C91C83C83C7CC83C74483881C83C83C83C83C83C7CC83C74483C81C83C83C3F0068659502000000E240EC5F083C
83C83C7D083C74484081C84084083C83C83C8407D083C74483C81C83C83C23483C6F883C9FC83C83C7CC83C74083C81C83C8
408408408407CC83C74083C81C83C8383F00688B5502000000E240EC5F883C83C83C7D083C74083C81C83C83C83C83C83C83
```

D-13383

C-11052

7/14/73 - 7/15/73

APOLLO 15

LM/ALSEP CONTINUOUS DATA TAPES

71-063C-01A

THIS DATA SET HAS BEEN RESTORED. THERE WERE ORIGINALLY 31 9-TRACK, 1600 BPI TAPES, WRITTEN IN BINARY. THERE ARE FOUR RESTORED TAPES. THE DR TAPES ARE 3480 CARTRIDGES AND THE DS TAPES ARE 9-TRACK, 6250 BPI. THE ORIGIAL TAPES WERE NOT STACKED IN TIME SEQUENTIAL ORDER. THE ORIGINAL TAPES WERE CREATED ON AN IBM 360 COMPUTER AND WERE RESTORED ON A IBM 9021 COMPUTER. THE DR AND DS NUMBERS ALONG WITH THE CORRESPONDING D NUMBERS AND TIME SPANS ARE AS FOLLOWS:

DR#	DS#	DD#	FILES	TIME SPAN	
DR005256	DS005256	D012772	1	07/24/73 - 07/25/73	
		D012773	2	07/23/73 - 07/24/73	(a)
		D012774	3	07/21/73 - 07/22/73	(b)
		D013167	4	07/16/73 - 07/17/73	(c)
		D013168	5	07/13/73 - 07/14/73	(d)
		D013169	6	07/19/73 - 07/20/73	
		D013170	7	07/20/73 - 07/21/73	
		D013171	8	07/17/73 - 07/18/73	(e)
DR005257	DS005257	D013172	1	07/15/73 - 07/16/73	(f)
		D013173	2	07/18/73 - 07/19/73	
		D013291	3	07/28/73 - 07/29/73	
		D013293	4	07/27/73 - 07/28/73	
		D013294	5	08/01/73 - 08/01/73	
		D013296	6	07/22/73 - 07/23/73	
		D013386	7	08/07/73 - 08/08/73	
		D013388	8	08/01/73 - 08/02/73	
DR005258	DS005258	D013389	1	08/04/73 - 08/05/73	
		D013391	2	08/02/73 - 08/03/73	
		D013292	3	07/14/73 - 07/15/73	
		D013930	4	07/25/73 - 07/26/73	
		D014014	5	07/26/73 - 07/27/73	(g)
		D013174	6	07/29/73 - 07/30/73	
		D013290	7	07/30/73 - 07/31/73	
		D013936	8	08/03/73 - 08/04/73	

71-0636-01A

DR#	DS#	DD#	FILES	TIME SPAN
DR005259	DS005259	D013931	1	08/05/73 - 08/06/73
		D013934	2	08/08/73 - 08/09/73 (h)
		D013933	3	08/09/73 - 08/10/73
		D013932	4	08/10/73 - 08/11/73
		D013935	5	08/11/73 - 08/12/73
		D013937	6	08/12/73 - 08/13/73
		D013938	7	08/06/73 - 08/07/73

(a) I/O ERRORS ON FILE 1, RECORDS, 1286,1370
(b) I/O ERRORS ON FILE 1, RECORDS, 5, 169, 170, 212, 259, 320, 383, 962, 1061, 1396, 1414
(c) I/O ERROR ON FILE 1, RECORD, 7
(d) I/O ERRORS ON FILE 1, RECORDS, 651, 1015, 1267, 1372, 1492, 1523
(e) I/O ERROR ON FILE 1, RECORD, 748
(f) I/O ERROR ON FILE 1, RECORD, 9720
(g) I/O ERROR ON FILE 1, RECORD, 116
(h) I/O ERROR ON FILE 1, RECORD, 169

```
9F2C15DE7463C959D3471C85040C300491C3                                   REC     1. LENGTH    18

9F2C15DE7463C959D3471C85040C300491C3                                   REC     2. LENGTH    18

3EB1E18C02026800000E240EC698860864860 7FC86080C85C6C485C85C85C85C8600007FC86080C8606C486086034486 0AF88   REC     3. LENGTH  7290
64E388608607FC85C80C8586C400085C860864864 7FC86080C8606C48648603EB1E1B1C202428000E240EC6A085C8608607F
86080C8606C486086486486886800 07FC8648108606C886085C10085CCD88604C08608607FC8608108646C400086886486 0
607FC8608108646C48648643EB1E1D772023F8000E240EC6A8868864864 7FC8608108606C485C85C85C85C85C0007FC8608
108606C486486402C864AF8864E388648607FC85C8108586C400085C8608608607FC8608108606C48608603EB1E1FD32026B
C000E240EC6B0864864864 7FC8608108606C486086086086086400 07FC86080C8606C485C85C03885CCD885C4C085C85C7FC
86080C8606C400086486086086 07FC86080C8606C4860860 3EB1E222F202734000E240EC6B88648608607FC86080C8646C48
6486486486086000007FC85C80C8606C486086429C864AF8864E388688647FC86480C8606C400086486486486 7FC86080C86
06C4860864 3EB1E248A202738000E240EC6C0864860860 7FC86081085C6C486086086086086000 07FC8608108606C4864864
37C864CD88644C08608607FC8608108606C400086086086086 07FC8648108646C48608603EB1E26E620274C000E240EC6C88
608608647FC8608108646C486486486486486400 07FC8608108606C486086400086 4AF8860E388608607FC86080C8606C400
0860864864864 7FC86880C8646C48648603EB1E2942202574000E240EC400860860860 7FC86080C8606C88608608608 5C85C
0007FC86080C8606C486086000086 0CD88604C08608607FC86080C8606C400086086086086 07FC86080C8606C4860860 3EB1
E2B9E20268C000E240EC40C8608608607FC86080C85C6C085C86086486486400 07FC85C80C85C6C085C85C2FC860AF8860E3
88608607FC86080C85C6C0000860860864864 7FC86081085C6C485C85C3EB1E2DF9202420000E240EC410860860864 7FC864
8108646C486086086085C8600007FC8608108606C486086003486 0CD88604C08608607FC8608108606C400086086086086 08
008608108646C48648643EB1E30552023FC000E240EC41886486486080085C81085C6C88608648648688640008008608 0C85
C6C885C85C3C886 0AF8860E388608607FC86080C8606C8000864868868647FC86080C8606C486085C3EB1E32B12026B0000
E240EC42485C8608607FC86080C8606C486486486486086000 07FC86080C8606C486086022C860CD88644C08648647FC8648
[illegible]
[illegible]
[illegible]
[illegible]
C8587FC85880C85C6C485C85C85C85C85C0007FC85C81085C6C485C85C1A485CAF885CE3885C85C7FC8588108586C400085C
85C8608607FC85C81085C6C485C85C3EB1E3C2020267 0000E240EC44085C85C85C7FC85C81085C6C485C85C8608608600007
FC86080C85C6C48588581E085CCD88604C08608607FC86080C8606C400086086085C85C7FC85C80C85C6C485C85C3EB1E3E7
B202680000E240EC448864864864 7FC86080C8606C485C85C8608608600007FC85C80C85C6C485C860398860AF885CE3885C
5C7FC85C80C85C6C400085C85C8608607FC8608108606C88608603EB1E40D7202428000E240EC45085C85C85C7FC85C8108
6C6C885C85C8608608600008008608108 5C6C885C86031C860CD88604C085C85C80085C81085C6C400086086086086 07FC85
C80C85C6C485C8603EB1E43332023F8000E240EC458868608608607FC86080C8606C486085C85C85C85C0007FC86080C8606C4
86086003C860AF8860E388608607FC86080C85C6C000085C85C85C85C7FC86080C8606C08648643EB1E458F2026BC000E240
EC46086085C85C7FC85C80C85C6C085C85C85C8608600007FC85C80C85C6C486086000086 4CD88604C086085C7FC85C80C86
06C400086086086086 07FC86081085C6C485C85C3EB1E47EA202734000E240EC468868608608647FC8648108646C486486486 4
86085C0007FC85C81085C6C485C85C004860AF8860E388608647FC8648108646C400086086085C85C7FC8608108646C48688
683EB1E4A4620273800 0E240EC470864860860 7FC85C81085C6C8860860860860860000 7FC8608108606C486086420C860CD
88604C08608607FC86080C85C6C400085C85C8608607FC86480C8646C48648603EB1E4CA220274C000E240EC478860860860
7FC86080C8606C486086086086086400 07FC86080C85C6C485C85C2F085CAF885CE388608647FC86480C8646C400086486086
085C7FC85C80C8606C48608603EB1E4EFE202674000E240EC480864864864 7FC86080C8606C486086085C85C85C0007FC86
080C8606C486486430C864CD88644C08648607FC86080C85C6C400085C8608608647FC8688108686C48688643EB1E5159202
68C000E240EC488860860860 7FC8608108606C8860860860864864000 7FC8648108646C8860860000860AFC860E388608607
FC8608108606C8000860864864864 7FC8688108686C48648643EB1E53B5202420000E240EC490860860860 7FC86081085C6C
485C8608608608640000 7FC86080C85C6C485C85C2BC85CCD88604C08608607FC86480C8646C400086086086086 07FC85C80C
85C6C485C85C3EB1E5611202 3FC000E240EC498860864868 7FC86880C8646C486085C85C85C85C0007FC86080C8606C48648
642D8860AF8860E388608607FC86080C85C6C400085C8608608607FC8648108646C48688683EB1E5860202680000E240EC4A
08688608 5C7FC8588108586C485885C8608608600007FC8648108646C0864860340860CD88604C085C85C7FC8608108606C0
000860860864868 7FC8608108606C085C85C3EB1E5AC8202F3C000E240EC4A885C85C85C7FC85C81085C6C486086086086 48
640007FC86480C8606C485C85809885CAF885CE388608647FC86480C8606C8000860860860860 7FC86080C8606C88648643E
B1E5D2420273C000E240EC480860860860 7FC86080C8606C8860860860 85C85C0007FC85C80C8606C8860860000860CD885C
4C085C85C7FC85C80C8606C800085C85C8608607FC86080C8606C48608603EB1E5F8020274C000E240EC488860 85C8607FC8
6080C8606C486086086086086000 07FC8608108606C486086000C860AF8860E388608607FC86080C8606C000086086486486
07FC85C80C85C6C0860860 3EB1E61DC202670000E240EC4C0860860860 7FC8608108606C486086086086086000 07FC860810
8606C486086000C860CD88604C08608647FC8648108646C400086486486086 07FC8608108606C486086 03EB1E64372026800
00E240EC4C8860860860 7FC85C81085C6C485C85C8608608600007FC86080C8606C486086021 0860AF8864E388648647FC86
80C8606C400085C85C8608607FC86080C8646C48648643EB1E6693202428000E240EC4D0860860860 7FC86080C85C6C485C
86086086486400 07FC8608108606C48608600EC860CD88604C08608607FC86080C8606C400086486486486 7FC86080C8606
C48648643EB1E68EF2023F8000E240EC4D886086085C7FC85C8108606C486086486486864000 7FC8648108606C48608602F
885CAF885CE388608607FC8608108606C400086486486486 07FC86080C8606C48608603EB1E6B4B2026BC000E240EC4E0860
8608607FC86080C8606C486486486486486000007FC85C80C85C6C486086020886 0CD88604C08608647FC86480C8646C00008
60860860860 7FC86080C8606C48608603EB1E6DA6202734000E240EC4E8860860860 7FC86080C8606C486486486086086000
```

APOLLO 15
D-13168
C-10215
194-195
7/13/73-7/14/73

See 69-099C-03E
for documentation & layout

```
9F2C15DE7463C959D3471C85040C300491C3                                    REC     1, LENGTH    18

9F2C15DE7463C959D3471C85040C300491C3                                    REC     2, LENGTH    18

3F044767A202748000E240EC41086886C86C7FC86C80C86C6BC86C86886886C86C0007FC87080C8706B887086C034868DEC8   REC     3, LENGTH  7290
682C486886C7FC86C80C86C6B80008688688 6C86C7FC86C80C86C6B88708703F04478D520276C000E240EC418868864864 7F
C86480C8686B886C8708748708 6C0007FC86480C8606B88648683C886CEBC870F288748707FC86C80C8686B800086486886C
86C7FC87080C86C6BC86C8683F0447B3120269400 0E240EC424868868868 7FC86480C8646BC8608648648688 6C0007FC86C8
0C86C6BC86886823886CDEC86C2C48688687FC86480C8646BC00086C87087086C7FC8688108686BC86C86C3F0447D8D20269
C000E240EC42C8688688687FC86C81086C6BC86C86C8688688680007FC87081086C6BC868864328864EBC864F2886886C7FC
86C81086C6BC00086C8688688687FC86C80C86C6BC86C8683F0447FE9202420000E240EC430860864864 7FC86C8108706BC8
7487487086C8680007FC86080C8646B886886C00086CDEC86C2C486C86C7FC86C80C86C6B800086868868868 7FC86880C86
86B88688683F04482442023FC000E240EC43886886C86C7FC87080C8706B887086C86C86C8680007FC86880C8686BC86C86C
198868EBC868F288648687FC86880C86C6BC00086886886C86C7FC86C80C8686BC8608603F04484A02026B0000E240EC4408
6486886C7FC86C80C86C6BC86C86C86C86C0007FC86C80C86C6BC8688681E4864DEC8642C48688687FC86C8108706BC00
086C86C8688687FC86C8108706BC8708703F04486FC202F5C000E240EC448868864864 7FC8648108686BC86C86C868868868
0007FC86C8108706BC8708703448 6CEBC86CF288688687FC86C80C86C6BC00086C86C8688687FC87080C8706BC8748703F04
4895720274C000E240EC45086C8688647FC86480C8686BC86C87086C86C8680007FC86880C8686BC868868008868DEC8682C
48688687FC86880C8686BC00086C86C86C86C7FC86880C8686BC8688683F0448BB320276C000E240EC45886C86C8687FC868
80C8686BC86886C86C86C8680007FC86480C8686BC86886C038870EBC870F2887086C7FC8688108646BC00086886C8708707
FC8688108686B886C86C3F0448E0F20269000 0E240EC46086C86C86C7FC8688108686BC86886C86C86C0007FC86C81086
C6BC86C86C00086CDEC8702C487086C7FC86880C8646B800086886C8708707FC87080C8706BC86C8683F044906B202690000
E240EC46886085C8607FC8648108706BC8748788748 6C8680007FC8648108686BC868868004868EBC868F2886C86C7FC86C8
0C86C6BC00086868868868687FC86880C86C6BC86C8703F04492C6202428000E240EC47086C86C8687FC86880C8686BC86886
8868868868 0007FC86880C8686BC86C86C20C86CDEC86C2C486C86C7FC86C80C86C6BC00086868648648647FC87080C8706B8
87086C3F04495222023F8000E240EC478868868868 7FC86880C8686BC86886886C86C86C0007FC86C81086C6BC8688642F08
68EBC868F2886C86C7FC86C8108686BC00086886C8708707FC86C81086C6B88688643F044977E2026BC000E240EC48086486
886C7FC86C81086C6B886C86C86C8708700007FC8688108686BC868868318868DEC86C2C487086C7FC86880C8646BC000868
8708708707FC86480C8646BC86886C3F04499DA202754000E240EC48886C86C86C7FC86880C8646BC86486486486886C0007
FC86C80C86C6BC86C86C00086CEBC868F288688647FC86480C8646BC00086886C8708747FC87480C8706BC86C8683F0449C3
5202748000E240EC49086C86C86C7FC86C80C86C6BC86C86C86C86C86C0007FC8688108686BC8688682C8868DEC8682C4868
8687FC86C80C86C6B800086C86C86C8707FC86880C8646BC8608643F0449E9120276C000E240EC498870874874 7FC86C8108
686BC86486486486886C0007FC86C81086C6BC8688642E4864EBC864F288688687FC86C8108686BC00086486886C8707FC87
080C86C6BC8688643F044A0ED20269400 0E240EC4A086486886C7FC86C80C8686BC868864868 86C8700007FC87081086C6BC
868864344864DEC8682C486C8707FC87081086C6BC00086886886C8707FC86880C8646BC8648643F044A34920269C000E240
EC4A886C86C86C7FC86C80C86C6BC86C86C86C86C86C0007FC86C80C86C6BC86C86C058868EBC868F2886886C7FC86C80C86
C6BC00086C86C86C8687FC86480C8686B886C8703F044A5A420242000 0E240EC4B087086C8687FC86480C8646BC864864868
86886C0007FC86C80C86C6BC868864000864DEC8642C486C8707FC87080C86C6BC00086486086486687FC87080C8706BC86C8
683F044A8002023FC000E240EC4B886886C86C7FC8688108646BC860864868708700007FC86C8108686BC86C86C00C86CEB
C86CF288688647FC8648108646BC00086C87087086C7FC8648108646BC8688683F044AA5C2026B0000E240EC4C086C86C86C
7FC86C80C86C6B886C868864868868 0007FC87080C8706B887086C00C86CDEC86C2C486C8707FC86C80C86C6B800086886C8
6C8707FC87080C86C6B88688683F044ACB7202F5C00CE240EC4C886886C8707FC87080C86C6BC868864860864868 0007FC86
C80C86C6BC86886820C868EBC868F288688687FC86880C86C6BC00086868868688687FC86880C86C6BC86C86C3F044AF13202
74C000E240EC4D08688688687FC86880C8686BC86C86C868864000 7FC8648108686BC8688680F886CDEC86C2C486C8687
FC8688108646BC00086868868688687FC86C8108706BC87086C3F044B16F20276C000E240EC4D88648648647FC86881086 86B
C86886886886C8680007FC8688108686BC86886831086CEBC86CF288688687FC86880C8686BC00086886486086 07FC86880C
86C6BC86C86C3F044B3CB202690000E240EC4E0868864864 7FC86480C8646B886886886886C8700007FC87080C86C6B888688
68210868DEC8682C48688687FC86880C86C6BC00087086C86C86C7FC86C80C86C6BC86C86C3F044B627202690000E240EC4E
886886886C7FC86C80C86C6BC86C868868688680007FC86C80C86C6BC86C8681CC864EBC864F2886886C7FC87080C8706BC
00086C8648608607FC86481086C6BC8708703F044B88220242800 0E240EC4F087086C86C7FC86C81086C6BC8688688648648
640007FC86881086C6BC86C86C12886CDEC8682C486C86C7FC86C8108686B800086486486486 87FC87080C86C6B886C8683F
044BADE2023FB000E240EC4F886C86C86C7FC86C80C86C6BC86C86C8688688680007FC86881086C6BC86C87000086CEBC86C
F2886C86C7FC8688108686BC00086486886C8707FC87080C8706BC86C8683F044BD3A2026BC000E240EC500868868868 7FC8
6480C8646BC86886C8708708700007FC86880C8686BC86486800086 8DEC86C2C48708707FC87080C86C6BC00086886886886
C7FC86C80C8686BC8688643F044BF9620275400 0E240EC5088648648687FC86880C86C6BC86C86886886C86C0007FC868810
8686B886486822486CEBC86CF2886C86C7FC8688108686B800086C86C86C8687FC8648108686B886C8703F044C1F12027480
00E240EC51086C86C86C7FC86C8108686BC86886C86C86C86C0007FC86480C8646BC8648642B8868DEC86C2C486C8707FC87
08108706BC00086868868868 7FC8688108686BC86C86C3F044C44D20276C000E240EC51886C86C86C7FC86C80C86C6BC86C
86C8688648640007FC86880C86C6BC87087035C86CEBC86CF288688687FC8688108646BC00086486886C8707FC87080C86C6
BC8688643F044C6A9202694000E240EC52086486886C7FC87080C86C6BC868864864864868 0007FC86C80C86C6B886C86C0E
886CDEC86C2C486C86C7FC86480C8646B800086886C87086C7FC86480C8646B886C8703F044C90420269C000E240EC528870
86C8687FC86480C8646B886886886C86C8700007FC86C81086C6B886886400086 4EBC868F288708747FC87481087 06B80008
688688688687FC8648108686BC86886C3F044CB60202420000E240EC53086C8708707FC86C81086C6BC868864864864868 00
```

D-13292
C-11562

7/14/73- 7/15/73

APOLLO 16

LM/ALSEP CONTINUOUS DATA TAPES

72-031C-01A

THIS DATA SET HAS BEEN RESTORED. ORIGINALLY IT CONTAINED 30 7-TRACK, 800 BPI TAPES WRITTEN IN BINARY. THERE ARE FOUR RESTORED TAPES. THE DR TAPES ARE 3480 CARTRIDGES AND THE DS TAPES ARE 9-TRACK, 6250 BPI. THE ORIGINAL TAPES WERE CREATED ON AN IBM 1130 COMPUTER AND WERE RESTORED ON AN IBM 9021 COMPUTER. THE DR AND DS NUMBERS ALONG WITH THE CORRESPONDING D NUMBERS AND TIME SPANS ARE AS FOLLOWS:

DR#	DS#	D#	FILES	TIME SPAN
DR005414	DS005414	D012778	1	07/14/73 - 07/15/73
		D013178	2	07/15/73 - 07/16/73
		D013298	3	07/16/73 - 07/17/73
		D012777	4	07/17/73 - 07/18/73
		D013177	5	07/18/73 - 07/19/73
		D013176	6	07/19/73 - 07/20/73
		D013175	7	07/20/73 - 07/21/73
		D012779	8	07/21/73 - 07/22/73 (a)
DR005415	DS005415	D012775	1	07/22/73 - 07/23/73
		D013180	2	07/23/73 - 07/24/73
		D012776	3	07/24/73 - 07/25/73
		D013943	4	07/25/73 - 07/26/73
		D013394	5	07/26/73 - 07/27/73
		D013300	6	07/27/73 - 07/28/73
		D013299	7	07/28/73 - 07/29/73
		D014023	8	07/29/73 - 07/31/73
DR005416	DS005416	D013301	1	07/30/73 - 07/31/73
		D013393	2	07/31/73 - 08/01/73 (b)
		D013179	3	08/01/73 - 08/02/73
		D013392	4	08/02/73 - 08/03/73
		D013945	5	08/03/73 - 08/04/73
		D013527	6	08/04/73 - 08/05/73
		D014022	7	08/05/73 - 08/06/73
		D013944	8	08/06/73 - 08/07/73
DR005417	DS005417	D013395	1	08/07/73 - 08/08/73
		D014021	2	08/08/73 - 08/09/73
		D013941	3	08/09/73 - 08/10/73
		D013942	4	08/10/73 - 08/11/73
		D013940	5	08/11/73 - 08/12/73
		D013939	6	08/12/73 - 08/13/73

(a) D012779 - REC. 592, FILE 1
(b) D013393 - REC. 805 & 1460, FILE 1

```
9F2C15DE7463C959D4471C85041C300491C3                                   REC     1, LENGTH    18

9F2C15DE7463C959D4471C85041C300491C3                                   REC     2, LENGTH    18

3F5BB63D7[illegible]026E0000E240EC4D078C78C7907E47908547907307907 8C7887887878 78C7E47908547907307 8C78C26478C5F47
873878C78C7E47908547907300007 8C78C7887887E47908547907307907 8C3F5BB6631002F3C000E240EC4D878878C78C7E
47908547907307907 8C7887E478878C7E478C85878C7307887887832878C1E078CFFC79078C7E478C85878C7300007907 8C788
7887E47908587907307 8C78C3F5BB688D00273C000E240EC4E078C78C7907E479085C79072C78C78C7887887 8C78C7E47908
5C79073079078C1C878C5F478873878C78C7E47908587907300007 8C78C7887 8C7E47908547907307907 8C3F5BB6AE900275
C000E240EC4E878878878C7E47908547907307 8C78C7887887 8C78C7E47908547907307 8C78C3FC7881E0788FFC78C78C7E4
78C8547907300007907 8C7887887E47908547907307 8C7883F5BB6D4500261000 0E240EC4F078878C78C7E478C85478C7307
8C78C78C78C78C78C7E47908547907 2C78C78C26C7885F478873878C78C7E47908587907 2C00078C7887887887E47908587 9
072C78C78C3F5BB6FA00263000 0E240EC4F878C78C78C7E478C85879072C78C78C78C7887 8C78C7E47908587907 2C79078C
29C78C1E0788FFC78C78C7E878C85878C73000079479078C7887E478C85879073078C78C3F5BB71FC002358000E240EC5007
8878C78C7E47908587947307907907 8C78C78C7907E47908587907307907 8C2A878C5F478C73878C78C7E478C85878C73000
078C78C78C78C7E47908547907307907 8C3F5BB7458002 3FC000E240EC5087887887 8C7E47908547907307 8C78C788788788
78C7E47908547907307 8C78C1C87881E0788FFC78C78C7E47908587907300007907 8C7887887E47908587907307907 8C3F5B
B76B30026EC000E240EC51078C78C78C7E47908587907307907 8C78878878C7907E47908587907307907 8C29078C5F478C73
878C78C7E47908587907300007 8C78C78C78C7E47908587907 2C78C78C3F5BB790F002734000E240EC51878878C78C7E4790
85879072C79078C78C7887 8C78C7E47908587907 2C79078C35878C1E0788FFC78C78C7E478C85878C73000079078C7887887
E478C85879073078C78C3F5BB7B6B00273800 0E240EC5207887 8C78C7E47908587907347907 8C78C78C78C7E478C85878
C73478C78C09878C5F478C73878C78C7E478C85878C73400078C78C78C7887E478C85479073479078C3F5BB7DC7002750000
E240EC5287887 8878C7E47908547907307 8C78C7887 8878878C7E078C85478C73078C78C3C878C1E078CFFC78C78C7E478C8
54790730000790 78C7887887E47908587907307 8C7883F5BB80220026100 00E240EC53078878C78C7E478C85878C73078C78
C78C78C78C78C7E47908587907307907 8C00C78C5F078C73878C78C7E87908 5C78C73000078C78C78C7887E878C85C78C730
7907903F5BB827E00263400 0E240EC53878C78C7E87908587907307 8C78C7E87908587907307907 9000C7
8C1E078CFFC78C7907E47908547907300007907 8C7887887E47908547907307 8C7883F5BB84DA002360000E240EC54078C78

78C7E478C85878C73000078C78C78C78C7E478C85879073079078C3F5BB8BED002F3C000E240EC55878C78C78C7E478C8587
8C73078C78C78C78C78C7E47908547907307907 8C1B078C1E0788FFC78C78C7E47908507907300007907 8C7887887E479
085079073478C7883F5BB8E4900273C000E240EC56078878C78C7E07908507 8C73478C78C78C78C78C7E07908547907 38
78C78C00478C5F478873878C78C7E07908547 8C73800078C78878878C7E47908587 8C73878C78C3F5BB90A500275C000E240
EC55878C78C78C7E47908 5C78C73478C78C78C78C78C7E47908 5C79073478C78C12C78C1E0788FFC78C78C7E478C85C79
073000079078C7887887E47908 5C79073078C78C3F5BB9300002610000E240EC57078878C78C7E47908587907 2C79078C78C
78C78C78C7E47908587907 2C78C78C1EC78C5F478C73878C78C7E47908587907 2C00078C78C7887 8C7E87908547907 2C7907
8C3F5BB955C002630000E240EC57878878C78C7E47908547907307907 8C78878878878C7E47908507907307 8C78C21C7881E
0788FFC78C78C7E478C85079073000079078C7887887E47908547907307 8C7883F5BB97B800236800 0E240EC58078878C790
7E47908587907307 8C78C7887 8878C78C7E07908587907307907 8C1DC7885F478873878C78C7E07908587 8C73000078C78C7
8878C7E47908587907307907 8C3F5BB9A140023FC000E240EC58878878C78C7E47908 5C78C73078C78C78C78C7E479
085C79073079078C1F078C1E0788FFC78C78C7E478C85879072C00079478C7887887E478C85879072C78C78C3F5BB9C6F002
6EC000E240EC59078878878C7E47908547907 2C79078C78C78878878C7E47908547907 2C78C78C32C7885F478873878878C7
E478C85479072C00078C78C7887887E47908547907 2C78C7883F5BB9ECB002734000E240EC59878878C7907E47908 5478C73
078C78878878878C78C7E47908 5478C73078C78800478 81E0788FFC78C78C7E478C85878C73000079078C7887887E478C858
78C73078C7883F5BBA1270027380 00E240EC5A078878C78C7E478C85878C73078C78C78C78C7E479085879073079 07
8C3FC78C5F478C73878C78C7E078C85878C73000078C78878878 87E478C85878C73078C7883F5BBA383002750000E240EC5A
878878C78C7E47908587907307907 8C78C78C78C78C7E47908587907307 8C78C0E47881E0788FFC78C78C7E478C858790730
0007907 8C7887887E47908587907307907 8C3F5BBA5DE002610000E240EC5B078C78C78C7E47908547907 2C78C78C7887887
8C78C7E47908587947 2C79078C28078C5F478C73878C78C7E47908547907 2C00078C78878878 7E47908547907 2C79078C3F
5BBA83A002634000E240EC5B878878C78C7E47908547907307 8C78878878878C7E47908587907307 8C78C2C87881E0788
FFC78C78C7E478C85879073000079078C7887887E47908587907307 8C78C3F5BBAA960023600 00E240EC5C078878C78C7E47
908587907307907 8C78C78878C78C7E87908587907307907 8C10478C5F078C73878C78C7E878C85878C73000078C78C78C78
C7E478C85879073079078C3F5BBACF20023FC000E240EC5C878C78C78C7E478C85878C72C78C78C78C78878C78C7E4790858
79073079078C1A078C1E0788FFC78C78C7E478C85879073000079078C78C78C7E47908587907307 8C78C3F5BBAF4D0026E00
00E240EC5D078878C78C7E47908587907307907 8C78C78C78878C78C7E47908587907307907 8C20878C5F078C73878C78C7E479
085479073000907 8C78C78878C7E47908547907307907 8C3F5BBB1A9002F3C000E240EC5D878878878C7E47908547907307 8C
7887887878878C78C7E47908587 8C73078C78C32878C1E078CFFC78C78C7E478C85878C73000079078C7887887E478C85C7907
3478C7883F5BBB40500273C000E240EC5E078878C78C7E478C85C78C73478C78878C78C78C7907E47908587907 3478C78C2C
C78C5F078873878C78C7E47908587907 3400078C78C78878C7E47908587907307907 8C3F5BBB66100275C000E240EC5E8788
78C78C7E47908587907 3079078C7887887 8C78C7E47908587907 3078C78C20C78C1E078CFFC78C78C7E478C85879073000007
9078C7887887E47908587907 3078C78C3F5BBB8C002610000E240EC5F078878878C7E47908587907307907 8C78C78878C78
```

D-13178
C-10235
196-197

7/15/73 - 7/15/73

See 69-099C-03E for documentation & format

9F2C15DE7463C959D4471C85041C300491C3 REC 1, LENGTH 18

9F2C15DE7463C959D4471C85041C300491C3 REC 2, LENGTH 18

3FAE1BF2C50272C000E240EC50876C7707747E0778854774734770770 76C76C76C7707E0774854774734770770 1B076C4247 REC 3, LENGTH 7290

6CFFC7707747E0770854770730000774770 76C76C7E0778854778730774770 3FAE1C1885025E0000E240EC51076C7707747E

0778854774734770770 76C76C76C7707E0774858774734770770 2E076C3DC76C724770774 7E0774858774734000 76C76C770

7707E0774858778734774774 3FAE1C3E3502610000E240EC51876C7707707E4774858774734770770 76C76C7707747E47748

5877473477477035876C42476CFFC7707747E4770858770734000774774770 76C7E4774858778734774770 3FAE1C63F50236

8000E240EC52076C7707747E4774854774734770770 76C76C7707747E4778854778738774770 0987703DC7707247707747E4

7748547707380007 6C76C7707707E4774854774738774770 3FAE1C89B5023FC000E240EC52876C7707747E4778854778734 7

7477076C76C7707747E0774858774734770770 3C876C42476CFFC7707707E0770858770734000774770 76C76C7E077885877

87347747703FAE1CAF75026EC000E240EC5307707707747E0774858774734770770 76C76C76C7747E0774858774730770770

00C76C3DC76C7247707747E0774854770734000 76C76C76C7707E0774854774734774770 3FAE1CD525026E4000E240EC5387

6C76C7707E0778858774734770770 76C76C7707707E4774858774738770770 00C76C42476CFFC7707747E477085877073800

0770770770770 7E4778858778738774770 3FAE1CFAE502708000E240EC5407707707747E4774854770738770 76C76C76C770

7747E4774854774738774770 00476C3DC76C72476C7747E0774854770738000 76C76C7707707E0774854774738770770 3FAE

1D20A502720000E240EC54876C7707747E0778854774734770770 76C76C76C7707E0774854774734770770 00876C424768FF

C7707707E0770858770734000774770 76C76C7E0774858774734774770 3FAE1D4655025E0000E240EC55076C7707747E0778

8587787387747076C7707707747E0774858774738770770 2EC76C3DC76C7247707747E0774858770738000 76C7707707747

E0778858778738778774 3FAE1D6C1502614000E240EC5587707747747E0774858774738770770 76C76C7707747E07885477

4738774770198770424 76CFFC7707747E0770854770738000774770 7707707707E0778854778738774770 3FAE1D910502360000

E240EC56076C7707747E0774854774738770 76C76C7707707E0774854774738774770 00476C3DC76C7247707747E47748

5477073800076C76C76C7707E4774858774738770770 3FAE1D8795023FC000E240EC56876C7707747E4774858774734770770

076C76C76C7707E0774858774734770770 11476C42476CFFC7707747E0770858770734000774770 76C76C7E0774858778734

7747703FAE1DDD45026E0000E240EC57076C7707747E0774858774734770770 770 76C7707747E0778854774734770770 1D47

6C3DC76C7247707747E0774854770734000 76C76C7707E0774854778734774770 43FAE1E030502EEC000E240EC57876C76

C7707E0774854774738770770 76C76C7707747E0778854774738770770 20C76C42476CFFC7707747E4770854770738000774

77076C7707E4778854778738774770 3FAE1E28C50270C000E240EC58076C7707747E4774854774738770770 76C76C7707747

E0774854774734770770 1C876C3DC76C72476C7707E0774854770734000 76C76C76C7707E0774854774734774770 3FAE1E4E

850272C000E240EC58876C76C7707E0774858774734770770 76C76C7707707E0774858774734770770 1DC76C42476CFFC770

7707E0770858770734000774774770 76C7E0774858778734774770 3FAE1E7435025E0000E240EC59076C7707747E07748587

4734770770770 76C7707747E0774854774734774770 32C76C3D8770724774774 7E076C8547607340007 6C77076C7647E077

0854774734774774 3FAE1E99F502610000E240EC5987647687747E0778850774734774770 76C7687707747D477484C774730

77876C004764424764FFC7747747CC7708487707 2C00077076C7707707CC77884C77C72C77476C3FAE1E8FB502368000E240

EC5A07707707707DC7748607747347707707774770 76C7707F477887C7747387707743FC7783DC77072876C77480477488C76

C73C00077076C76476C8107788987747 3C7747703FAE1EE575023FC000E240EC5A876877077881877889C77473C77476C764

7687707748 1C770898774 73C7707680E476442476CFFC7747748187708907707 3C00076C76C76C76C810778880778738770 7

683FAE1F0B25026EC000E240EC5B076C7707788047788707707 3476C76C76C76C76C7707F4774860774734770774280770 3D

C76C72476C7707E8774858770730000770770 76C7707E0774850774730774770 3FAE1F30E5026E4000E240EC5B876876C774

7D8778850778730774770 76C76C7707747D0774854774730774770 2A476C42476CFFC7707747D077485C770730000774774 7

707707D4774868778730774770 3FAE1F56A502708000E240EC5C0770770774 7DC7788747747307747707707 76C7707E477

487C7787307747701047703DC770728770774 7F0774884770734000770 76C76C7F8778888778734778774 3FAE1F7C6502

720000E240EC5C8770774774800774888778738774 76C7647687707788047788847747387707 6C17C76842476CFFC7747788

0477487877473800077077076C7708047788707747387707683FAE1FA225025E0000E240EC5D07687707747FC77886477473

8770774774770770770 7F877485C778738774774 1F07703DC76C7247707707EC7748587707340007707707707707E4778858

7787347747703FAE1FC7D502614000E240EC5D8770770774 7E0778858778734774770770770770774 7DC778860778730774 7

7033C770424770FFC7747747D8770864770730000778778770 76C7DC7788707 7C7307747703FAE1FED9502360000E240EC5E

0770770774 7DC7748787787347747747707707707747E077487C7787347787742C87703DC770728774774 7E877487C770738

0007707707747747EC77887C7787387747743FAE201355023FC000E240EC5E8774774774 7F4770878774738770770770770 7

707747F8778870774738774774 1F8774424770FFC7747707F877086C7707380007787787747707F877C86477C7347787703F

AE203905026E0000E240EC5F076C7707747F8778860774734774774770770770770 7F8778860778738778774 1D07703DC770

7247747747F0774860770738000 76C7707707707EC7748607747387747703FAE205EC502EEC000E240EC5F876C76C7707E87

7486477473477077076C76C76C7707E0774864774734770 76C25476C424768FFC76C7707E0770868770734000774770 76C76

C7DC77486C7747347747703FAE2084850270C000E240EC60076C76C7707DC77486C7747347707707 6C76C76C7707E0774870

7747347707702 2476C3DC76C7287707747E0774870774738000 76C76C7707707E8774870774738774770 3FAE20AA450272C0

00E240EC60876C7707707EC77486C7747387707707 6C76C7707707F077486C7707387707703 7C770424770FFC7707707F477

0868770738000774774770770 7F4774864774738774770 3FAE20CFF5025E0000E240EC61076C76C7747F4774860774738770

77076C76C7707747F077885C7747347707702707703DC76C72876C7707EC77485C7707340007707707707707E87748607747

347747703FAE20F5B502610000E240EC61876C76C7747E8778860774734770 76C76C76C7707E4774868774738774770 11

476C42476CFFC7707747E477086C7707380007774774770 76C7E077486C7787387747703FAE211B7502368000E240EC62076C

7707747E077486C7747387707707 6C76C7707747E477486C7747387707700 1076C3DC76C7247707747E4774868770738000 7

6C7707707707E8774868774738774774 3FAE214135023FC000E240EC62876C7707707E8774864774734770770 76C76876C77