#320

IMP-J

TRI-AXIS MAGNETOMETER

15 SEC. B. VECTORS

73-078A-01A

REQ. AGENT	ACQ. AGENT
CMW	JHK

IMP-J

TRI-AXIS MAGNETOMETER

15 SECOND MAGNETIC FIELD VECTORS

73-078A-01A

Nine additional tapes were added to this data set. The tapes are 9 track, 6250 bpi, created on an IBM 370. Copied electronically/reblocked 100-1. D and C numbers and time span are as follows:

D#	C#	FILES	TIME SPAN
D-108047	C-031771	6	07/18/91 - 12/31/91
D-108048	C-031772	6	01/03/92 - 07/02/92
D-108049	C-031773	6	07/03/92 - 12/02/92
D-108050	C-031774	6	01/02/93 - 07/01/93
D-108051	C-031775	6	07/02/93 - 01/03/94
D-108052	C-031776	5	01/02/94 - 05/31/94
D-108053	C-031777	5	06/01/94 - 11/01/94
D-108383	C-032452	5	11/01/94 - 03/31/95
D-108384	C-032453	3	04/01/95 - 07/01/95
D-108778	C-032875	4	01/01/96 - 04/30/96
D-108779	C-032876	3	05/01/96 - 07/31/96

REQ AGENT	RAND NO	ACQ AGENT
MLR WTJ	RC3700 RC8116	JHK
CAW VJP	RC5364 RC1473	
RSH SAR	RC7808 V0323	
DHG		

IMP-J
TRI-AXIS MAGNETOMETER
15 SECOND MAGNETIC FIELD VECTORS
73-078A-01A

This data set consists of 49 tapes compressed from 131 originals created on an IBM 370. The tapes are binary, 6250 bpi, 9 track, with one file per tape. They are VBS with a Blocksize of 16564 and a logical record size of 276. All but the last tape are uniform length (9090 blocks; the last block containing 18 logical records). The 'D' and 'C' numbers and time spans follow:

D#	C#	Files	Time Span
D-74731	C-26285	1	10/30/73 - 02/14/74
D-74732	C-26286	1	02/14/74 - 05/30/74
D-74733	C-26287	1	05/30/74 - 09/12/74
D-74734	C-26288	1	09/12/74 - 12/27/74
D-74735	C-26289	1	12/27/74 - 04/17/75
D-74736	C-26290	1	04/17/75 - 08/09/75
D-74737	C-26291	1	08/09/75 - 12/20/75
D-74738	C-26292	1	12/20/75 - 04/23/76
D-74739	C-26293	1	04/23/76 - 08/21/76
D-74740	C-26294	1	08/21/76 - 12/17/76
D-74741	C-26295	1	12/17/76 - 04/14/77
D-74742	C-26296	1	04/14/77 - 08/08/77
D-74743	C-26297	1	08/08/77 - 12/07/77
D-74744	C-26298	1	12/07/77 - 04/25/78
D-74745	C-26299	1	04/25/77 - 10/03/78
D-74746	C-26300	1	10/03/78 - 02/26/79

D-074747	C-026301	1	02/26/79 - 07/14/79
D-074748	C-026302	1	07/14/79 - 12/08/79
D-108358	C-032393	1	12/08/79 - 01/01/80
D-074749	C-026303	1	01/01/80 - 06/04/80
D-074750	C-026304	1	06/04/80 - 10/04/80
D-074751	C-026305	1	10/04/80 - 04/10/81
D-074752	C-026306	1	04/10/81 - 10/09/81
D-074753	C-026307	1	10/09/81 - 07/10/82
D-074754	C-026308	1	07/10/82 - 02/08/83
D-074755	C-026309	1	02/08/83 - 09/15/83
D-074756	C-026310	1	09/15/83 - 02/25/84
D-074757	C-026311	1	02/25/84 - 12/14/84
D-074758	C-026312	1	12/14/84 - 07/28/85
D-074759	C-026313	1	07/28/85 - 02/07/86
D-074760	C-026314	1	02/07/86 - 08/12/86
D-074761	C-026315	1	08/12/86 - 01/27/87
D-078027	C-026703	1	01/27/87 - 07/17/87*
D-078788	C-026817	1	07/19/87 - 12/27/87*
D-078789	C-026818	1	12/27/87 - 05/30/88*
D-079060	C-026872	1	05/30/88 - 11/07/88*
D-079727	C-027221	1	11/07/88 - 04/09/89*
D-080587	C-027785	1	04/09/89 - 08/29/89*
D-080588	C-027786	1	08/29/89 - 12/31/89*
D-083161	C-028052	1	01/01/90 - 02/19/90
D-083160	C-028051	1	02/19/90 - 04/10/90
D-083162	C-028053	1	04/10/90 - 05/30/90
D-083163	C-028054	1	05/28/90 - 07/17/90
D-083164	C-028055	1	07/18/90 - 09/06/90
D-084069	C-028243	1	09/06/90 - 10/26/90

D-84070	C-28244	1	10/26/90 - 12/14/90
D-84071	C-28245	1	12/14/90 - 12/31/90
D-84072	C-28246	1	01/01/91 - 02/19/91
D-84073	C-28247	1	02/19/91 - 04/10/91
D-84074	C-28248	1	04/11/91 - 05/31/91
D-86215	C-29236	1	06/01/91 - 07/21/91

MEMO

Date: June 8, 1993

To: Users of IMP-8 magnetic field data

From: Ron Lepping/IMP-8 Magnetometer PI, NASA-GSFC, Code 695, SPAN address LEPVAX::U5RPL, phone: (301) 286 5413

Re: IMP-8 magnetic field data: Notification of day-count designation change

As all or most of you know, our IMP-8 magnetic field data since launch has been labeled according to a Decimal Day scheme, where Jan 1 = Decimal Day 0, instead of the more common Day-of-Year (DOY) scheme, where Jan 1 = DOY 1. Since our data have been, and are being, processed within the International Solar-Terrestrial Physics (ISTP) program since late 1992 as so-called Key Parameters where the DOY designation is used, we will now convert our in-house processed data (i.e., on LEPVAX/GSFC) to a DOY time base, starting for that data occurring at the first instant of year 1992. Obviously, we wish to avoid the uncomfortable position of having two identical magnetic field data sets possessing two different day-count designations, arising because of the two different sources. All future data products (tapes, electronic-mail files, paper plots, etc.) will reflect this change. And as soon as we are able to make the modification, most of these products will also contain Month and Day-of-Month with the hope that the chance of future day-count errors is reduced by this redundancy. If we should reprocess any data for periods earlier than the first instant of 1992, for any reason, we will retain the Decimal Day designation for such data.

We are sorry for any inconvenience that this may cause you or your teams. As Joe King (IMP-8 Project Scientist) commented recently, "Maybe we can say with pride, at the end of the IMP mission, that the magnetic field day-count change took place about half way through the mission!"

Ron Lepping

NSSDC will hold its IMP-8 MAG data in adherence to the Decimal Day and DOY conventions described above, with the 1/1/92 shift in conventions. Exception to this is OMNI where all data, IMP-8 MAG included, use DOY throughout. Joe King 6/24/94

IMP-8 SOLAR WIND MAGNETIC FIELD AND PLASMA DATA IN SUPPORT OF ULYSSES - JUPITER ENCOUNTER: 13-31 JANUARY 1992

R. P. LEPPING, A. J. LAZARUS, L. J. MORIARTY, P. MILLIGAN,
R. S. KENNON, R. E. McGUIRE, AND W. H. MISH

DECEMBER 25,1992

LABORATORY FOR EXTRATERRESTRIAL PHYSICS

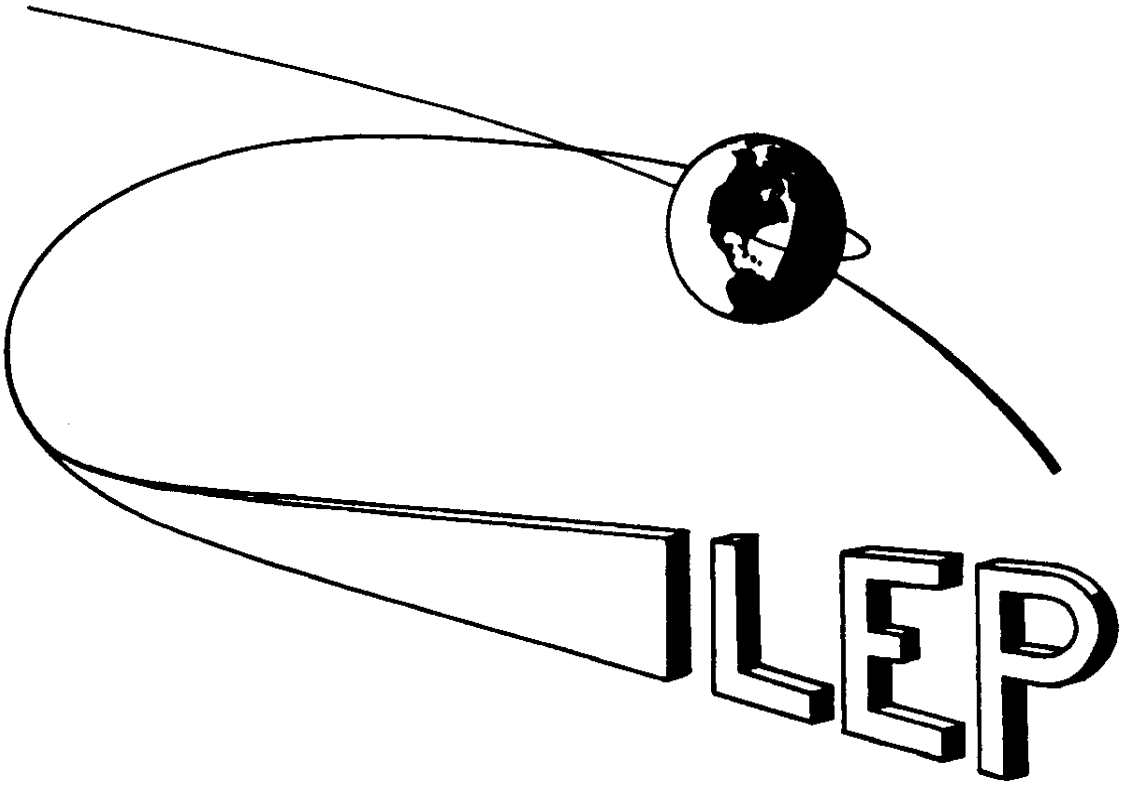

National Aeronautics and Space Administration
Goddard Space Flight Center
Greenbelt, Maryland 20771

APPENDIX A

The magnetic field experiment on the IMP-8 spacecraft (See Figure A-1) utilizes a tri-axial fluxgate [saturable inductor] magnetometer (see Ness, 1970). See Scearce et al. (1992) for a complete description of the experiment. The instrument originally had three, automatically determined, ranges, ±12 nT, ±36 nT, and ±108 nT, full scale. Because of a range-change circuit failure occurring in early July 1975, the experiment was commanded into a fixed ±36 nT range on July 11 at 1255:09 UT and has been in that range ever since. The measurements are A-to-D converted onboard, to an 8-bit resolution, yielding ±0.14 nT quantization sensitivity, which is larger than the intrinsic sensor noise level of 0.025 nT RMS. The data from the two-bit (per component) adaptive delta modulator, incorporated into the instrument, and applied to the intrinsic sample rate of 25 vectors/s, was never utilized, and hence the rate of the full (8-bit) vector words, which occur every 320 ms, represents the effective sample period of the instrument. The sampling rate is synchronized to the spacecraft clock; the basic spacecraft clock frequency is 6.4 kHz. The sensor unit is mounted on the end of a boom approximately 4 m from the center of the spacecraft.

Figures A-2 and A-3 show pictures of the magnetometer board and data processing unit, respectively, and a list of experiment specifications are provided in Table I. These units are mounted on the instrument shelf of the spacecraft, which is passively thermally controlled to the range of -30°C to 50°C. The sensor unit (on the boom) is also passively thermally controlled, but to a range of -50°C to 50°C. Figure A-4 shows the functional block diagram of the experiment. Originally planned magnetic field science objectives were listed by Ness (1966) and those objectives for the IMP-8 mission, as a whole, appear in a GSFC document entitled "Interplanetary Monitoring Platform, IMP-J."

TECHNICAL DESCRIPTION OF INSTRUMENT

FLUXGATE MAGNETOMETER

The fluxgate magnetometer is a tri-axial instrument developed and manufactured by Schonstedt Instrument Company (Figure A-2). All fluxgate magnetometers have in common a ferromagnetic core(s) which is excited by driving, or gating, a magnetic field generated by current in a coil which contains the core. The magnetic flux induced in the core by the gating field is modified by an external magnetic field which generates even

harmonics on the output winding whose amplitude depends on the magnitude of the external field.

The Heliflux sensor is a cross between a parallel and orthogonal gated core; see Schonstedt (1961). When the AC current is applied to the primary winding, the magnetizing field has components both parallel and transverse to the core strips. The entire core is cylindrically saturated by the gating field to minimize the remanent magnetization, or core memory. The secondary winding is wound around the core, perpendicular to the primary winding. Thus, the coupling between the gating field and core output is minimized by the physical orientation of the gating and output windings. (See Schonstedt, 1961, for detailed construction.)

The electronics unit is comprised of a single oscillator-driver, and a preamplifier, phase detector, voltage bias and output driver for each channel (Figure A-5). Since the output channels are the same, only one channel will be discussed. The oscillator generates an AC signal of 24 kHz which is power amplified and fed through the primary windings of the sensors to cyclically drive the magnetic cores of the sensors into saturation. The presence of an external magnetic field along the axis of the sensor results in the generation of even harmonics in the secondary winding of the sensor. The amplitude of the second-harmonic voltage is proportional to the magnitude of the magnetic field and the phase depends upon the direction of the magnetic field when the direction is reversed. The second-harmonic signal is amplified by a tuned amplifier. The tuned pre-amplifier is temperature compensated.

The excitation signal is doubled. This reference signal is then applied to the gate of an FET and it gates the amplified second harmonic signal. The gated signal is integrated to form the DC output. With no signal, the phase detector is set to 2.5 VDC. The DC output is isolated by a DC amplifier.

The sensitivity is controlled by the negative feedback, and the desired range is obtained by changing the feedback elements. The operating range is determined by 2 binary bits generated by two relays. The range is selected by range change commands generated in the Magnetometer Processor; 4 command lines are required (but see page A-1 [top]).

MAGNETOMETER PROCESSOR

The magnetometer processor in the magnetic field experiment (see Figure A-6) does the following:

1. Analog to Digital (A/D) conversion of the magnetic field signals.
2. Digital filtering of the magnetic field signals.
3. Delta modulation of the magnetic field signals. (This data stream was not used on-ground.)
4. Data multiplexing of the two processing systems, (one redundant), high and low bit rate data, and the combining of the absolute value words and delta modulation 2-bit words into a serial output bit stream.
5. Interfacing with the spacecraft data encoder.
6. Interfacing with the spacecraft for commands.
7. Automatic range switching, sensing, control and range relay drive.
8. Sensitivity calibration control and signal generation.
9. Mechanical flipper control and drive.
10. Monitoring of the engineering status.

The magnetometer processor is housed in a standard spacecraft wedge shaped unit 12-7/8 inches high (see Figure A-3). The processor electrical hardware is primarily low power TTL. The digital filter memory is dynamic MOS, where transistors are used for driving circuits. Monolithic integrated circuit operational amplifiers and field effect transistors are used in the A/D converters.

ANALOG TO DIGITAL CONVERTERS

Sampling of the data is done every forty milliseconds in synchronism with an encoder furnished signal. The data is stored in a sample-and-hold circuit until the internal timing of the magnetometer processor is ready to commence its sample cycle. All three axes are sampled simultaneously.

The analog to digital conversion is done by a double ramp (RC charge-discharge) A/D converter. The converter works by charging the RC circuit with the voltage to be

measured during a precise time period, discharging the circuit into a negative reference voltage, and then measuring the discharge time with a crystal controlled clock. Most component induced errors are canceled out due to charge and discharge of the same RC components.

There are three sample-and-hold circuits and three A/D converters (one per axis) per system. For the total of two systems there are six sample-and-hold circuits and A/D converters. The three A/D converters per system have been used to provide redundancy so that the system is not lost in the case of a single converter failure.

SYSTEM REDUNDANCY

Redundancy has been built into the processor and encoder to circumvent failures and/or minimize their impact. There are two main data handling systems (A or B) in the processor. Each system has a digital filter, a delta modulator, range sensing logic, and sets of A/D converters. A double set of encoders has also been provided in the spacecraft, and either of the two processor systems can work with either of the two encoder systems, so that proper operation can occur with any combination of failures of one processor system and/or one encoder system. Three A/D converters per system have been provided, for a total of 6 in the processor, in order to reduce the data loss if one A/D converter is lost.

RANGE SWITCHING LOGIC

The description of the range switching scheme and supporting electronics is described by Scearce et al., 1992. Since the instrument was commanded into the fixed ±36 nT range, as mentioned above, we do not discuss it further here.

OUTPUT MULTIPLEXER

The output multiplexer performs three basic functions:

1. Mixing of the X, Y, and Z absolute data words and delta modulation 2-bit words into a serial bit stream.
2. Selection of system A or system B data.
3. Selecting the proper number of samples for high and low bit rates.

All of these functions are performed for both the data, and for the clocks for the data.

TIMING

There are three timing standards for the experiment. Two are derived from crystal controlled clocks and the other is derived from the encoder timing signals. There are two separate and identical crystal controlled timing units, one per system (A or B). The experiment sampling is done in synchronism with a 40 millisecond encoder signal. The internal data processing within the experiment is done in synchronism with the crystal clocks.

Because the memory for the digital filter is dynamic, it is kept running all of the time. After sampling is done and the data stored in a sample-and-hold circuit, processing and A/D conversion of the data are held up until the MOS memory is in the proper position with respect to the processing timing. The data processing sequence is divided into 8 equal time periods and one variable time period. Period 0 is the variable time period between the time when the sample-and-hold takes the data and the time that the MOS memory is in its desired starting state. During periods 1 and 2 the previous sample of X-axis data is processed in the digital filter. In time period 2 the A/D charge takes place. The A/D discharge (for all axes) takes place during time periods 3, 4, 5, and 6. In time period 3 the X-axis data which has been processed by the digital filter is processed by the delta modulator. During time periods 3 and 4 the Y-axis data is processed by the digital filter; this data is also from the previous sample time. In time period 5 the filtered Y-axis data is processed in the delta modulator. In time period 7 the Z-axis data from the previous sample is processed by the delta modulator. In time period 8 of every eighth sample period the Z-axis is separately processed for both high and low bit rates.

REFERENCES

Interplanetary Monitoring Platform, IMP-J, NASA/GSFC publication.

Mish, W. H., and R. P. Lepping, Magnetic field experiment data processing systems: Explorers 47 and 50, NASA/GSFC, X-694-76-158, August 1976.

Ness, N. F., A proposal for the magnetic field experiment for IMPs H and J, NASA/GSFC, X-612-66-461, September 1966.

Ness, N. F., Magnetometers for space research, Space Sci. Rev., 11, 111-222, 1970.

Scearce, C. S., C. V. Moyer, R. P. Lepping, and N. F. Ness, GSFC magnetic field experiments, Explorers 47 and 50, NASA/GSFC, X-695-76-191, October 1976. Modification in preparation, 1992.

Schonstedt, E. O., Saturable measuring device and magnetic core therefor, U.S. Patent 2916696 (December 1959) and U.S. Patent 2981885 (April 1961).

Smith, B. D., Ulysses spacecraft travels toward sun after completing Jupiter observations, Aviation Week and Space Technology (p. 65), February 17, 1992.

Tsurutani, B., Results for Ulysses' Jupiter flyby, EOS, Transactions of AGU, 73, p. 114, March 17, 1992.

APPENDIX

TABLES

I Magnetic Field Experiment Specifications
II IMP-8 Initial Sensitivity Calibration

FIGURES

A-1 IMP-8 Spacecraft
A-2 Magnetometer electronics unit
A-3 Data processing unit
A-4 IMP-8 magnetic field experiment: block diagram
A-5 Electronics block diagram
A-6 Magnetometer processor: block diagram

TABLE I

MAGNETIC FIELD EXPERIMENT SPECIFICATIONS

Weight	
Electronics	5.5 lb
Sensor	1.25 lb
Power	
Electronics	5 W
Thermally oscillating Actuator (10 min every 46 hours)	5 W
Thermal Calibration	
Electronics	-40°C to +60°C
Sensor	-75°C to +75°C
Zero drift/year	±1 nT
Linearity	±1%
Resolution (Sensitivity)	±0.05 nT

TABLE II

IMP-8 INITIAL SENSITIVITY CALIBRATION

Range*	Counts/nT		
	D1	D2	D3
±12 nT	10.1	10.2	10.0
±36 nT	3.39	3.37	3.34
±108	0.927	0.923	0.930

*Since July 11, 1975 the instrument has been fixed in the ±36 nT range (see text).

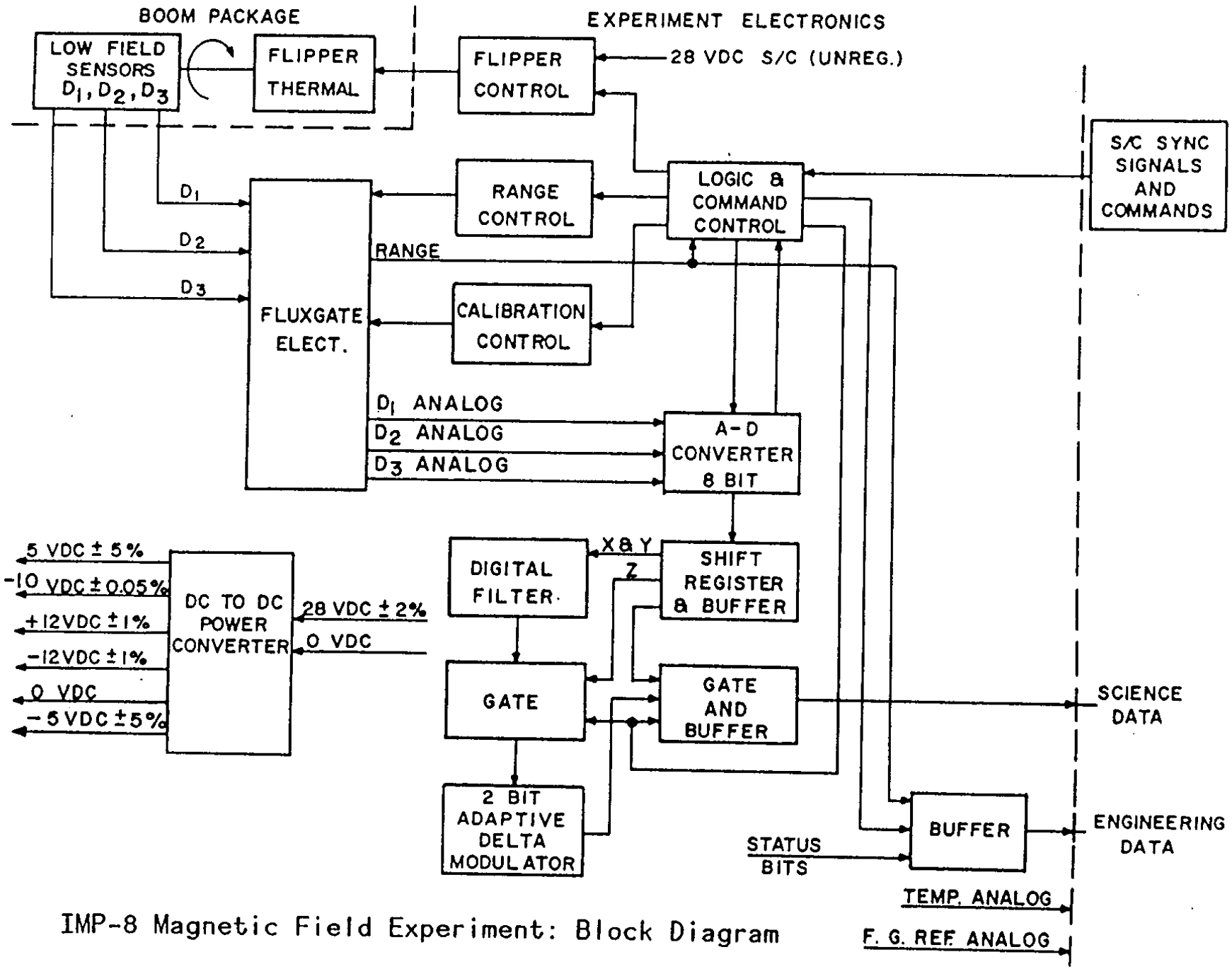

IMP-8 Magnetic Field Experiment: Block Diagram

FIGURE A-4

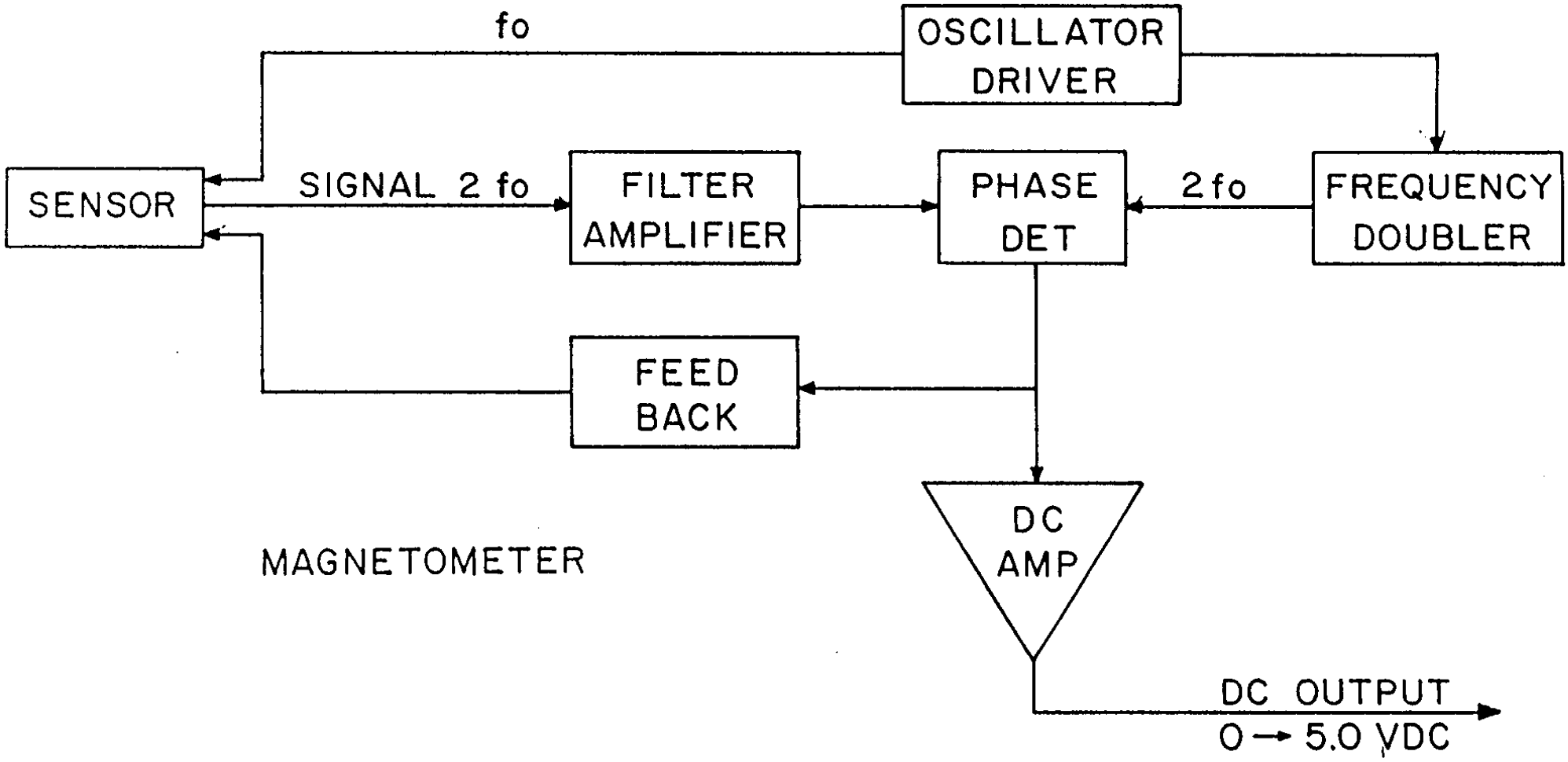

FIGURE A-5 Electronics Block Diagram

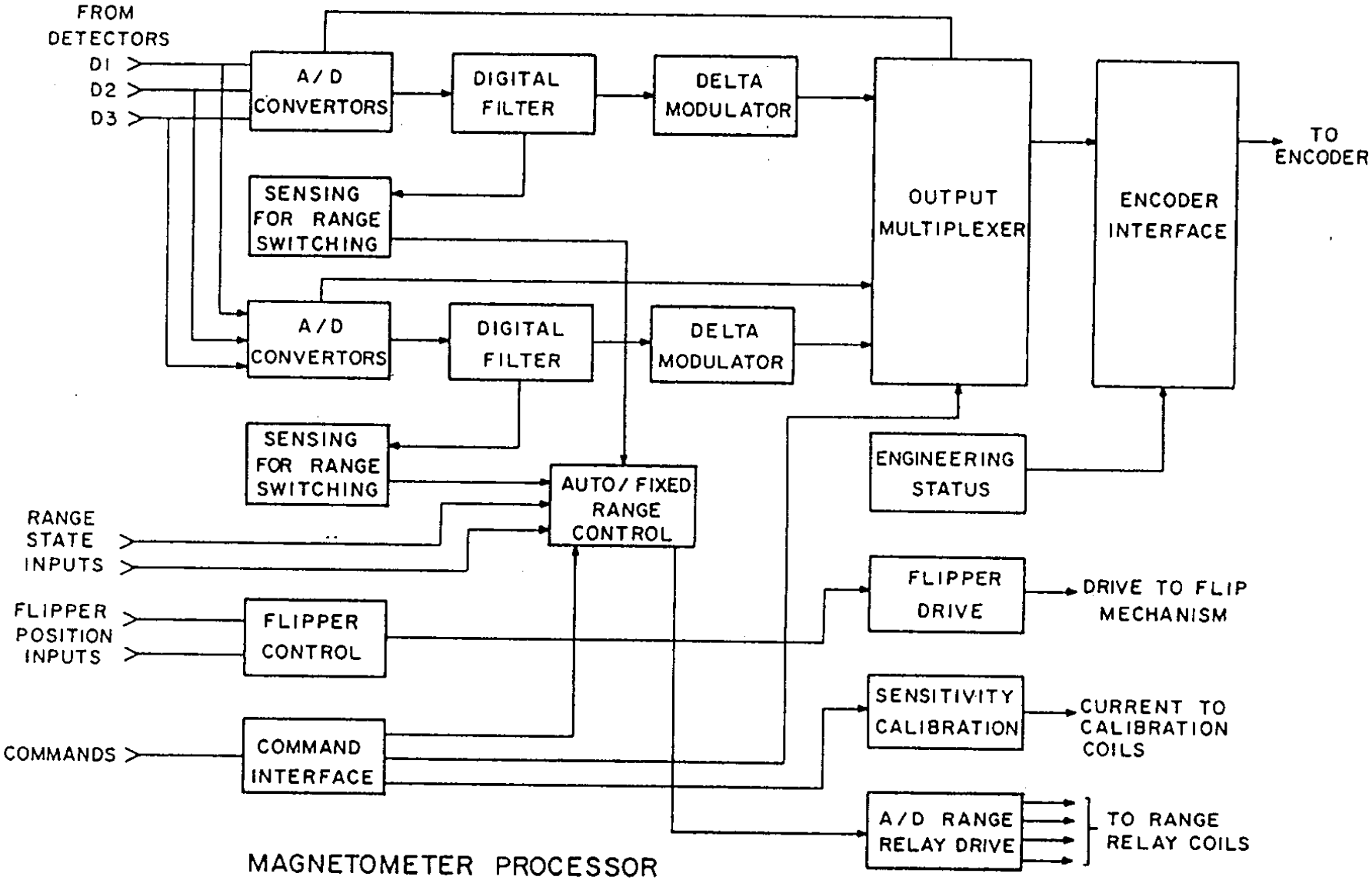

MAGNETOMETER PROCESSOR
BLOCK DIAGRAM

FIGURE A-6

September 22, 1982

Dear Colleague,

An error has been discovered in the IMP-J(8) magnetometer data for the period January 1, 1980 (hr 0) through May 23, 1980 (hr 17). This error is such that the y and z components of the magnetic field vector (GSE and GSM coordinates) have the wrong sign. The field angles derived therefrom are also incorrect: the field latitude angle has the wrong sign and the field longitude angle is best recomputed as $\tan^{-1}(B_y/B_x)$.

This error resulted from the confluence of two factors--the December 1973 180° flip of the spacecraft about the spacecraft-sun line and the fact that the tapes provided to IMP experimenters by the Information Processing Division at Goddard have one digit year identifiers. Magnetometer data taken through May 23, 1980 were processed in this laboratory before our software was changed to account for our being in 1980 and not 1970. Unfortunately, prior to that change, coordinate transformations appropriate to the pre-December 1973 spacecraft orientation were applied, resulting in erroneous signs for the field components normal to the spacecraft sun line.

This error affects both data tapes and plots at 15.36 sec resolution, a 5-min resolution tape, and also hourly averages which were folded onto the NSSDC Interplanetary medium composite tape (the "omnitape"). Corrected versions of all these data sets will be generated. In the event that someday you possess both the incorrect version and the corrected version, and you are not sure which is which, note the following. The incorrect data show for January 1, 1980, an increasingly positive field latitude from hour 4 into hour 21, when the latitude (and B_z) becomes negative. The correct data will show oppositely-signed behavior.

I want to thank Dr. Peter Bythrow of the Applied Physics Laboratory for bringing to my attention the possibility of a problem in the early 1980 IMP-J magnetometer data.

Sincerely yours,

Joseph H. King
Interplanetary Physics Branch
Laboratory for Extraterrestrial Physics

June, 1988: The 15-sec tapes held by NSSDC contain data corrected for the error discussed above. (JHK)

IMP H/J 15.36 STATISTICS TAPE PRODUCED BY PHASE II PROGRAM

This tape is written by the Phase II program using the following DD card.

```
IMPJ.SUMMARY
//FT20F001 DD DSN=IMPH.SUMMARY,LABEL=(1,SL,,OUT),
// DISP=(SHR,KEEP),DCB=(RECFM=VBS,BLKSIZE=16564,
// LRECL=276,DEN=3)
```

ITEM	DESCRIPTION	(TYPE)(SIZE)	UNITS	NOTES
1*	Year	I*4		Last two digits only
2*	Day	I*4	Days	Jan 1 = 0
3*	Milliseconds of day	I*4	Millisec	Elapsed Millisec in day
4*	Data Quality Flag	I*4		
5*	Orbit Number	I*4		
6*	Bit Rate Flag	I*4		
7*	Pseudo Sequence Count	I*4		
8*	Fill = Zero (0)	I*4		
9*	Housekeeping Data	I*4		See Footnote (1)
10	Field Magnitude (F1) (Average over 15.36 sec.)	F6.1	γ	$F1 = \frac{1}{n}\sum^{n} F_i$ where F_i is computed by PAYSTA subroutine over 1.28 seconds.
11	Field Magnitude (F2) (Average over 15.36 sec.)	R*4	γ	See Footnote (2)
12	Field Latitude (or inclination θ)(Average over 15.36 sec.)	R*4	Degrees	$-90° < \theta < +90°$ (Footnote 4)
13	Field Longitude (or azimuthal angle) ϕ (Average over 15.36 sec.)	R*4	Degrees	$0° < \phi < 360°$ (Footnote 4)

* Items 1 thru 9 are for the last sequence included in the 15.36 second statistical computation.

ITEM	DESCRIPTION	(TYPE)(SIZE)	UNITS	NOTES
14	Variance XX from averages	R*4	γ^2	Variance Matrix over 15.36 sec
15	Variance YY from averages	R*4	γ^2	$\begin{vmatrix} V_{XX} & -- & -- \\ V_{YX} & V_{YY} & -- \\ V_{ZX} & V_{ZY} & V_{ZZ} \end{vmatrix}$
16	Variance ZZ from averages	R*4	γ^2	
17	Variance YX from averages	R*4	γ^2	
18	Variance ZX from averages	R*4	γ^2	See footnote (3)
19	Variance ZY from averages	R*4	γ^2	
20	N	I*4		Number of sequences over which statistics were computed. N_{max} = 384
21	ND	I*4		Number of detail points over which statistics were computed. ND_{max} = 384
22	Trajectory (Day)	I*4	Day	January 1 = 0
23	Trajectory (millisec of day)	I*4	Millisec	
24	Geomagnetic Latitude of S/C	R*4	Degrees	
25	Geomagnetic Longitude of S/C	R*4	Degrees	
26	X Geocentric SE position of S/C	R*4	Kilometers	
27	Y Geocentric SE position of S/C	R*4	Kilometers	
28	Z Geocentric SE position of S/C	R*4	Kilometers	
29	Radial Distance	R*4	Kilometers	

ITEM	DESCRIPTION	(TYPE)(SIZE)	UNITS	NOTES
30	Y Solar Magnetospheric position of S/C	R*4	Kilometers	
31	Z Solar Magnetospheric position of S/C	R*4	Kilometers	
32	Geomagnetic Latitude of Sun	R*4	Degrees	
33	Geomagnetic Longitude of Sun	R*4	Degrees	
34	X Moon's Position in Geocentric SE	R*4	Kilometers	
35	Y Moon's Position in Geocentric SE	R*4	Kilometers	
36	Z Moon's Position in Geocentric SE	R*4	Kilometers	
37		R*4		Element given in following order:
38		R*4		
39		R*4		1st row, 1st col. 1st row, 2nd col. 1st row, 3rd col.
40	Items 37 thru 45	R*4		2nd row, 1st col. 2nd row, 2nd col.
41	Rotation Matrix from SE to SM	R*4		2nd row, 3rd col. 3rd row, 1st col.
42		R*4		3rd row, 2nd col. 3rd row, 3rd col.
43		R*4		
44		R*4		37 thru 45
45		R*4		
46		R*4		Same order for elements
47	Items 46 thru 54	R*4		
48	Rotation Matrix from CI to SE (CI=Celestial Inertial)	R*4		46 thru 54
49		R*4		
50		R*4		
51		R*4		

ITEM	DESCRIPTION	(TYPE)(SIZE)	UNITS	NOTES
52		R*4		
53		R*4		
54		R*4		
55	Fill = Zero (0)	R*4		
56	Fill = Zero (0)	R*4		
57	Angle of right ascension of spin vector of S/C in C.I.	R*4	Degrees	
58	Angle of declenation of spin vector of S/C in C.I.	R*4	Degrees	
59	Field latitude, θ_{SE}, in SE coordinates (Averaged over 15.36 sec)	R*4	Degrees	
60	Field latitude, θ_{SM}, in SM coordinates (Averaged over 15.36 sec)	R*4	Degrees	
61	Field longitude, ϕ_{SE}, in SE coordinates (Averaged over 15.36 sec)	R*4	Degrees	
62	Field Longitude, ϕ_{SM}, in SM coordinates (Averaged over 15.36 sec)	R*4	Degrees	
63	Bx_{SE} Averaged over 15.36 sec	R*4	γ	
64	By_{SE} Averaged over 15.36 sec	R*4	γ	
65	Bz_{SE} Averaged over 15.36 sec	R*4	γ	
66	Bx_{SM} Averaged over 15.36 sec	R*4	γ	
67	By_{SM} Averaged over 15.36 sec	R*4	γ	
68	Bz_{SM} Averaged over 15.36 sec	R*4	γ	

Footnotes

(1)

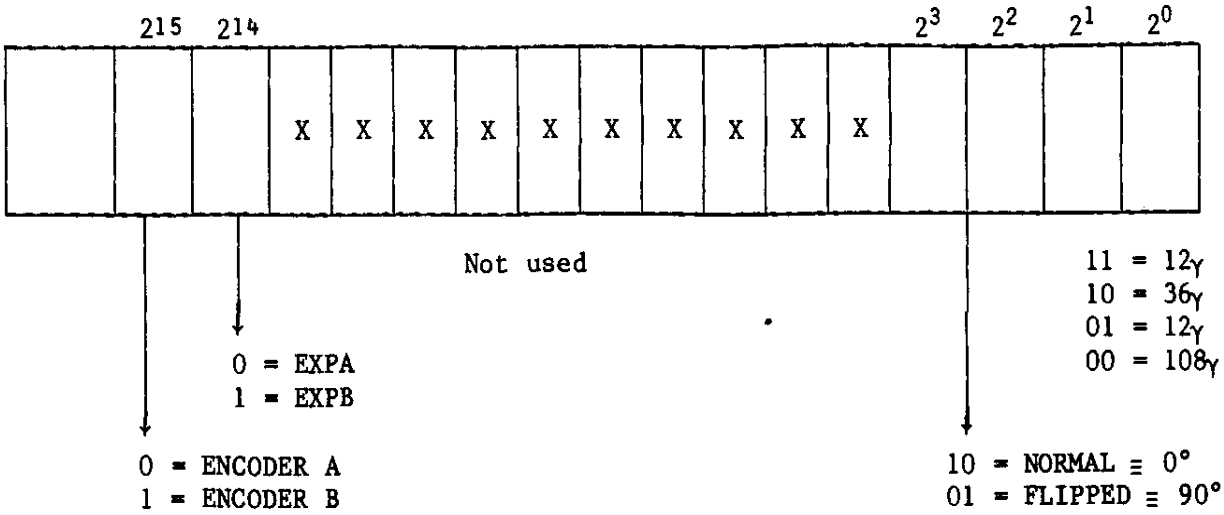

(2) $F2 = SQRT((\frac{1}{N}\sum_{i=1}^{N} X_i)^2 + (\frac{1}{N}\sum_{i=1}^{N} Y_i)^2 + (\frac{1}{N}\sum_{i=1}^{N} Z_i)^2)$ where X_i, Y_i, & Z_i are computed by PAYSTA subroutine over 1.28 seconds.

(3) e.g., $V_{XX} = (N \sum_{i=1}^{N} X_i^2 - \sum_{i=1}^{N} X_i \sum_{i=1}^{N} X_i)/N(N-1)$

and $V_{ZY} = (N \sum_{i=1}^{N} Z_i Y_i - \sum_{i=1}^{N} Z_i \sum_{i=1}^{N} Y_i)/N(N-1)$, etc.

(4) The quasi-payload coordinate system is spacecraft centered with $\hat{X}_p$ toward the Sun, Z_p aligned with the spin axis and positive at or near North-SE (usually within 2°), and $\hat{X}_p \times \hat{Y}_p = \hat{Z}_p$.

```
**** TSO FOREGROUND HARDCOPY ****
DSNAME=W3HAL.HAL.FORT                                  (CNVIMPJ )

      DIMENSION IBUF(68),BUF(68)                                        00000020
      EQUIVALENCE(IBUF(1),BUF(1))                                       00000030
      NREC = 0                                                          00000040
      NRECW= 0                                                          00000050
    1 CONTINUE                                                          00000060
      NREC = NREC + 1                                                   00000070
      IF(MOD(NREC,1000).EQ.0)WRITE(6,5005)NREC,NRECW                    00000080
 5005 FORMAT(' READING RECORD#',2(1X,I6))                               00000090
      CALL FREAD(IBUF,8,LEN,&20,&10)                                    00000100
      GO TO 50                                                          00000110
   10 CONTINUE                                                          00000120
      WRITE(6,5100)NREC                                                 00000130
 5100 FORMAT(' ERROR DETECTED READING RECORD#',I6)                      00000140
      GO TO 1                                                           00000150
   20 CONTINUE                                                          00000160
      NREC = NREC - 1                                                   00000170
      WRITE(6,5200)NREC,NRECW                                           00000190
 5200 FORMAT(' END OF FILE DETECTED, RECORDS    READ=',I6,/,            00000200
     *       '                       RECORDS WRITTEN=',I6)              00000210
      CALL REWIND(8)                                                    00000220
      READ(5,5555,END=999)VOLSER                                        00000230
 5555 FORMAT(6A1)                                                       00000240
      WRITE(6,5556)VOLSER                                               00000250
 5556 FORMAT(' MOUNTING VOLSER ',6A1)                                   00000260
      CALL MOUNT(1,8,VOLSER)                                            00000270
      GO TO 1                                                           00000280
   50 CONTINUE                                                          00000290
      DO 60 I = 26,31                                                   00000300
      BUF(I) = BUF(I) / 6378.                                           00000310
   60 CONTINUE                                                          00000320
      WRITE(9,5000)(IBUF(I),I=1,9),(BUF(I),I=10,19),                    00000330
     *             (IBUF(I),I=20,23),(BUF(I),I=24,33),                 00000340
     *             (BUF(I),I=37,68)                                    00000350
      NRECW = NRECW + 1                                                 00000351
      GO TO 1                                                           00000360
  999 CONTINUE                                                          00000370
      CALL LEAVE(9)                                                     00000380
      CALL REWIND(9)                                                    00000390
      STOP                                                              00000400
 5000 FORMAT(I2,I3,I8,I2,I4,I2,I9,I2,I6,4F6.1,6F7.2,                    00000410
     *       I2,2I3,I8,42F6.1)                                          00000420
      END                                                               00000430
```

From: NCFMRB::OPERATOR 19-DEC-1996 08:06:49.47
To: NCF::ALOPEZ
CC:
Subj: dd108778 hex listing

HEX DUMP OF DD108778

(0)	60000000	01000000	AE890100	02000000	9A020000	01000000	9F5CE424	00000000	66110000	4F42FBCF
(40)	4F425269	4A4390C8	8544C5E6	2340965D	0C3F3343	2B3F33A3	72BF7363	C83ECD72	88BC0000	05000000
(80)	A0000000	00000000	60EA0000	704304C7	A5417213	05C904F6	1E4908D0	0349EC7E	7549E4E1	E548A81A
(120)	2B49B46F	D5C270A6	D2C30A7D	69C968BC	9B49B4F8	59C72C49	80400000	00000000	00000000	00000000
(160)	7540724C	92BF967C	00000000	923F967C	7540724C	2F3FF41B	67C0C368	C8BF22B1	7C40AA3A	203FB0A7
(200)	8B3E6054	00000000	CBBF3AB1	6A406ADE	206A616E	01000000	8644B8FE	884332B3	4943D368	064372EE
(240)	8644FB26	86448159	7ABFBF98	04C2AB48	1F420BB4	7ABFBF98	2CC24072	E6412C5C	60000000	01000000
(280)	99C50100	00000000	9A020000	01000000	AB5CE424	00000000	66110000	44427633	43424B9A	47432BE6
(320)	1D44814C	A13FD8C2	54409A3D	EA3DE438	C7BF7707	293EB660	7BBEBCBB	0A000000	40010000	00000000
(360)	60EA0000	704304C7	A5417213	05C904F6	1E4908D0	0349EC7E	7549E4E1	E548A81A	2B49B46F	D5C270A6
(400)	D2C30A7D	69C968BC	9B49B4F8	59C72C49	80400000	00000000	00000000	00000000	7540724C	92BF967C
(440)	00000000	923F967C	7540724C	2F3FF41B	67C0C368	C8BF22B1	7C40AA3A	203FB0A7	8B3E6054	00000000
(480)	CBBF3AB1	6A406ADE	206A616E	01000000	8644B8FE	884332B3	494316ED	574330EB	1D44FF82	3244FAC7
(520)	E6C14101	3E41AB6E	16424AE4	E6C14101	1C3F5098	1E428334	60000000	01000000	84010200	00000000
(560)	9A020000	01000000	B75CE424	00000000	66110000	3E425331	214210A5	8543B398	7244B85F	82424542
(600)	D542CE2B	AC3E6D32	A6C2690B	0B40C2D3	4AC04E3E	0C000000	80010000	00000000	C0D40100	704354CD
(640)	9B416267	06C92804	1E4944C7	0349F87A	7549D4E1	E548E022	2B49CC61	D6C2400B	D2C3CAFD	69C96CBB
(680)	9B4912F9	59C72C49	80400000	00000000	00000000	00000000	75404F51	92BFFC5B	00000000	923FFC5B
(720)	75404F51	2F3F241F	67C0A368	C8BF06B1	7C40863A	203F9CAA	8B3EE856	00000000	CBBF3AB1	6A406ADE
(760)	206A616E	01000000	8644B8FE	884332B3	8543D452	4C43B179	7344E994	7D442FB1	E3C059EE	65C1DC65
(800)	14425D6B	E3C059EE	C2C13CC4	FB4127AA	60000000	01000000	6F3D0200	00000000	9A020000	01000000
(840)	C35CE424	00000000	66110000	40429736	3D42E8D5	48439397	88447BA6	804010BB	D5409B5C	A540F009
(880)	81C0A17B	47C02B7F	B640D90C	0C000000	80010000	00000000	C0D40100	704354CD	9B416267	06C92804
(920)	1E4944C7	0349F87A	7549D4E1	E548E022	2B49CC61	D6C2400B	D2C3CAFD	69C96CBB	9B4912F9	59C72C49
(960)	80400000	00000000	00000000	00000000	75404F51	92BFFC5B	00000000	923FFC5B	75404F51	2F3F241F
(1000)	67C0A368	C8BF06B1	7C40863A	203F9CAA	8B3EE856	00000000	CBBF3AB1	6A406ADE	206A616E	01000000
(1040)	8644B8FE	884332B3	47433111	044322BC	884424E0	88447272	00400959	F4C14DB4	1042B4EC	00400959
(1080)	1EC2ACAC	CF41C0CD	60000000	01000000	5A790200	00000000	9A020000	01000000	CF5CE424	00000000
(1120)	66110000	42428DAB	42427225	4543A2CA	884425A7	A53F2186	C53F27FB	3A3F279B	8DBFC2CD	37BFE916
(1160)	7D3F6593	0C000000	80010000	00000000	C0D40100	704354CD	9B416267	06C92804	1E4944C7	0349F87A
(1200)	7549D4E1	E548E022	2B49CC61	D6C2400B	D2C3CAFD	69C96CBB	9B4912F9	59C72C49	80400000	00000000
(1240)	00000000	00000000	75404F51	92BFFC5B	00000000	923FFC5B	75404F51	2F3F241F	67C0A368	C8BF06B1
(1280)	7C40863A	203F9CAA	8B3EE856	00000000	CBBF3AB1	6A406ADE	206A616E	01000000	8644B8FE	884332B3
(1320)	44434144	014349EF	884466DF	88443E74	044066F1	FDC1BDDB	124212AC	044066F1	23C2628F	D0414289
(1360)	60000000	01000000	45B50200	00000000	9A020000	01000000	DB5CE424	00000000	66110000	41422B3C
(1400)	4042102E	424389BE	8D44AD72	9940F6A9	01403639	283F4617	163FAB82	04BF17BD	1C3F085F	0C000000
(1440)	80010000	00000000	C0D40100	704354CD	9B416267	06C92804	1E4944C7	0349F87A	7549D4E1	E548E022
(1480)	2B49CC61	D6C2400B	D2C3CAFD	69C96CBB	9B4912F9	59C72C49	80400000	00000000	00000000	00000000
(1520)	75404F51	92BFFC5B	00000000	923FFC5B	75404F51	2F3F241F	67C0A368	C8BF06B1	7C40863A	203F9CAA
(1560)	8B3EE856	00000000	CBBF3AB1	6A406ADE	206A616E	01000000	8644B8FE	884332B3	404378FD	FF42AAD4
(1600)	8D447F9F	8C44722E	EA406B96	F9C11424	0F422B5F	EA406B96	20C2395B	CB41308F	60000000	01000000
(1640)	30F10200	00000000	9A020000	01000000	E75CE424	00000000	66110000	4142CC48	41422014	3543BB4E
(1680)	8C44C3AE	333FB14A	FC3EE9A2	F83E5D74	C93D9027	B43EA34B	643E7EC3	0B000000	60010000	00000000
(1720)	C0D40100	704354CD	9B416267	06C92804	1E4944C7	0349F87A	7549D4E1	E548E022	2B49CC61	D6C2400B
(1760)	D2C3CAFD	69C96CBB	9B4912F9	59C72C49	80400000	00000000	00000000	00000000	75404F51	92BFFC5B
(1800)	00000000	923FFC5B	75404F51	2F3F241F	67C0A368	C8BF06B1	7C40863A	203F9CAA	8B3EE856	00000000
(1840)	CBBF3AB1	6A406ADE	206A616E	01000000	8644B8FE	884332B3	33435A96	E442677B	8C4424D8	8B44B7B3
(1880)	DD4062AC	05C2C2EF	0842F947	DD4062AC	27C2014E	B841789D	60000000	01000000	1E230300	02000000
(1920)	9A020000	01000000	F15CE424	00000000	66110000	3F423136	3E427EEA	38436319	8B444680	5A3FC922
(1960)	0E3FDBE6	373FB74D	BA3E6E67	7F3EDBA6	073F9264	08000000	00010000	00000000	20BF0200	704364D3
(2000)	9141DABA	06C94C12	1E4980BE	03490877	7549C4E1	E548802B	2B49C853	D6C2F86F	D3C39C7E	69C970BA
(2040)	9B4970F9	59C72C49	80400000	00000000	00000000	00000000	75404056	92BFD83A	00000000	923FD83A

(2080)	75404056	2F3F5022	67C08268	C8BFEAB0	7C40633A	203F88AD	8B3E7059	00000000	CBBF3AB1	6A406ADE
(2120)	206A616E	01000000	8644B8FE	884332B3	3643D96E	E942A87F	8B44F7AC	8A4499BD	AD406B9C	03C249C8
(2160)	08426A6C	AD406B9C	25C2AC41	BA41EC34	60000000	01000000	06690300	00000000	9A020000	01000000
(2200)	FF5CE424	00000000	66110000	464220BA	46425F9C	2C436C95	8E44A2F0	C33E2F1A	6C3E58FB	EA3E38AC
(2240)	113CD6BE	E43C9E12	883DDB37	0B000000	60010000	00000000	20BF0200	704364D3	9141DABA	06C94C12
(2280)	1E4980BE	03490877	7549C4E1	E548802B	2B49C853	D6C2F86F	D3C39C7E	69C970BA	9B4970F9	59C72C49
(2320)	80400000	00000000	00000000	00000000	75404056	92BFD83A	00000000	923FD83A	75404056	2F3F5022
(2360)	67C08268	C8BFEAB0	7C40633A	203F88AD	8B3E7059	00000000	CBBF3AB1	6A406ADE	206A616E	01000000
(2400)	8644B8FE	884332B3	2A43B3C4	D5425503	8F44DA12	8D44F19B	2241A364	0CC2BD38	064273AB	2241A364
(2440)	2CC2E9D7	B2415106	60000000	01000000	F1A40300	00000000	9A020000	01000000	0B5DE424	00000000
(2480)	66110000	4B427F53	4A427629	2943622D	9244E712	D03F65C3	6640107E	4D40847F	8ABF74D1	C4BF1F4C
(2520)	3D40CA86	0C000000	80010000	00000000	20BF0200	704364D3	9141DABA	06C94C12	1E4980BE	03490877
(2560)	7549C4E1	E548802B	2B49C853	D6C2F86F	D3C39C7E	69C970BA	9B4970F9	59C72C49	80400000	00000000
(2600)	00000000	00000000	75404056	92BFD83A	00000000	923FD83A	75404056	2F3F5022	67C08268	C8BFEAB0
(2640)	7C40633A	203F88AD	8B3E7059	00000000	CBBF3AB1	6A406ADE	206A616E	01000000	8644B8FE	884332B3
(2680)	2743923F	D1427EE1	9244362E	9044D936	6541204C	0BC22359	064280C7	6541204C	2CC2A209	B241CFBB
(2720)	60000000	01000000	DCE00300	00000000	9A020000	01000000	175DE424	00000000	66110000	4542F8F3
(2760)	45420212	2E431DBF	9044E5F2	1740E1E9	8640D96C	063F93CD	1540F888	B8BEB209	A33E175D	0C000000
(2800)	80010000	00000000	20BF0200	704364D3	9141DABA	06C94C12	1E4980BE	03490877	7549C4E1	E548802B
(2840)	2B49C853	D6C2F86F	D3C39C7E	69C970BA	9B4970F9	59C72C49	80400000	00000000	00000000	00000000
(2880)	75404056	92BFD83A	00000000	923FD83A	75404056	2F3F5022	67C08268	C8BFEAB0	7C40633A	203F88AD
(2920)	8B3E7059	00000000	CBBF3AB1	6A406ADE	206A616E	01000000	8644B8FE	884332B3	2C430FDB	DB42FC7F
(2960)	9144D311	8F443036	454175CD	06C205D8	06425AF0	454175CD	27C237C4	B541C99C	60000000	01000000
(3000)	C71C0400	00000000	9A020000	01000000	235DE424	00000000	66110000	49425994	47422BBC	534352D5
(3040)	8944321E	DC40A32B	4D406BBF	4440B6CF	86C09000	51C0C80B	28400E0B	0B000000	60010000	00000000
(3080)	20BF0200	704364D3	9141DABA	06C94C12	1E4980BE	03490877	7549C4E1	E548802B	2B49C853	D6C2F86F
(3120)	D3C39C7E	69C970BA	9B4970F9	59C72C49	80400000	00000000	00000000	00000000	75404056	92BFD83A
(3160)	00000000	923FD83A	75404056	2F3F5022	67C08268	C8BFEAB0	7C40633A	203F88AD	8B3E7059	00000000
(3200)	CBBF3AB1	6A406ADE	206A616E	01000000	8644B8FE	884332B3	52438D48	10430712	8944DA5C	884447C6
(3240)	20407202	F1C1EFF6	1E42579C	20407202	21C23C3E	EA41E5E6	60000000	01000000	B2580400	00000000
(3280)	9A020000	01000000	2F5DE424	00000000	66110000	4E42C498	4E42C976	64438EB7	8444A517	AD3E4E3D
(3320)	103F8CCE	343E103E	94BCABAA	A1BD1F7C	2E3E1F7C	0C000000	80010000	00000000	E0930400	7043BCDE
(3360)	7C41BCC0	06C9902E	1E49F4AC	0349206F	7549A4E1	E548C83D	2B495437	D7C2F838	D4C36E80	69C974B8
(3400)	9B492EFA	59C72C49	80400000	00000000	00000000	00000000	75405D60	91BFE8F6	00000000	913FE8F6
(3440)	75405D60	2F3FB428	67C04168	C8BFB2B0	7C401C3A	203F64B3	8B3E885E	00000000	CBBF3AB1	6A406ADE
(3480)	206A616E	01000000	8644B8FE	884332B3	63437B72	21434561	84441F6D	8544BA27	22C02D05	E0C12AD2
(3520)	2C4231E2	22C02D05	1DC25008	054295A9	60000000	01000000	9D940400	00000000	9A020000	01000000
(3560)	3B5DE424	00000000	66110000	53422C7D	524200E0	5B4323F9	8A44CDDD	8B40B28E	BC3E0EEB	6C3ECDCC
(3600)	96BF4F8D	7FBB0E6B	64BDDB37	0B000000	60010000	00000000	E0930400	7043BCDE	7C41BCC0	06C9902E
(3640)	1E49F4AC	0349206F	7549A4E1	E548C83D	2B495437	D7C2F838	D4C36E80	69C974B8	9B492EFA	59C72C49
(3680)	80400000	00000000	00000000	00000000	75405D60	91BFE8F6	00000000	913FE8F6	75405D60	2F3FB428
(3720)	67C04168	C8BFB2B0	7C401C3A	203F64B3	8B3E885E	00000000	CBBF3AB1	6A406ADE	206A616E	01000000
(3760)	8644B8FE	884332B3	5A43E955	18430393	8B44DA1C	8A449306	8B402DDE	F1C1E6E4	2B4212DB	8B402DDE
(3800)	24C2FAEB	02425C3E	60000000	01000000	88D00400	00000000	9A020000	01000000	475DE424	00000000
(3840)	66110000	4C42691E	4C42EE0C	4943CE94	8E44F636	BF3E46FF	143E4617	153FB249	88BC36D9	533D74D1
(3880)	5ABE74D1	0C000000	80010000	00000000	E0930400	7043BCDE	7C41BCC0	06C9902E	1E49F4AC	0349206F
(3920)	7549A4E1	E548C83D	2B495437	D7C2F838	D4C36E80	69C974B8	9B492EFA	59C72C49	80400000	00000000
(3960)	00000000	00000000	75405D60	91BFE8F6	00000000	913FE8F6	75405D60	2F3FB428	67C04168	C8BFB2B0
(4000)	7C401C3A	203F64B3	8B3E885E	00000000	CBBF3AB1	6A406ADE	206A616E	01000000	8644B8FE	884332B3
(4040)	474365CB	0743BF35	8E44BB64	8C4412B3	0641B40B	FDC1CAE7	1C42B231	0641B40B	26C29936	E341200A
(4080)	60000000	01000000	730C0500	00000000	9A020000	01000000	535DE424	00000000	66110000	4A42FD74
(4120)	4A42315F	4A43067E	8F44A7BB	983E4657	F13E4697	A13E6D32	603D279B	7C3D279B	07BE4E36	0C000000
(4160)	80010000	00000000	E0930400	7043BCDE	7C41BCC0	06C9902E	1E49F4AC	0349206F	7549A4E1	E548C83D
(4200)	2B495437	D7C2F838	D4C36E80	69C974B8	9B492EFA	59C72C49	80400000	00000000	00000000	00000000
(4240)	75405D60	91BFE8F6	00000000	913FE8F6	75405D60	2F3FB428	67C04168	C8BFB2B0	7C401C3A	203F64B3
(4280)	8B3E885E	00000000	CBBF3AB1	6A406ADE	206A616E	01000000	8644B8FE	884332B3	484335A5	084373CD
(4320)	8F4412E6	8D44EED8	1E415F81	F6C19CE1	1B423A64	1E415F81	22C23F9E	E341E180	60000000	01000000
(4360)	5E480500	00000000	9A020000	01000000	5F5DE424	00000000	66110000	4C4225CA	4C42C8B5	55439018
(4400)	8C4463EF	C83EA313	983E4617	6D3D6DB2	0ABE4637	FFBC6593	22BD840F	0C000000	80010000	00000000
(4440)	E0930400	7043BCDE	7C41BCC0	06C9902E	1E49F4AC	0349206F	7549A4E1	E548C83D	2B495437	D7C2F838

(26080)	6344AB18	6E447577	ABC1DB66	B8C1416D	37429039	ABC1DB66	0BC225AB	16426F39	60000000	01000000
(26120)	CF011800	00000000	9A020000	01000000	1F61E424	00000000	66110000	5B4291DD	5B425C7E	55436F7C
(26160)	5D447498	AF3FE1E3	9B3FB2C9	0E3F271B	9EBE1F3C	3C3E4E36	BD3E2F3A	0C000000	80010000	00000000
(26200)	60E31600	7143FC17	06C130C6	07C9A048	1D49CCFC	0349781F	75493CE0	E6489044	294914FE	DEC228F4
(26240)	DEC3F8A0	6AC9FC46	9B4942C9	5AC7504D	80400000	00000000	00000000	00000000	7540FDD5	8EBFAAD6
(26280)	00000000	8E3FAAD6	7540FDD5	2F3F8468	67C0B665	C8BF7CAE	7C405637	203FF0ED	8B3E5091	00000000
(26320)	CBBF3AB1	6A406ADE	206A616E	01000000	8644B8FE	884332B3	554371B8	2443EFFF	5E449C50	6A448C20
(26360)	C1C19067	B0C19513	30423648	C1C19067	05C2E6B8	1042D6B8	60000000	01000000	BA3D1800	00000000
(26400)	9A020000	01000000	2B61E424	00000000	66110000	5942AD2E	58422DD7	55432575	5C444446	9E3FE1D3
(26440)	633F17FD	BB3FB209	C3BE840F	4B3E2FBA	21BB7CF0	0C000000	80010000	00000000	60E31600	7143FC17
(26480)	06C130C6	07C9A048	1D49CCFC	0349781F	75493CE0	E6489044	294914FE	DEC228F4	DEC3F8A0	6AC9FC46
(26520)	9B4942C9	5AC7504D	80400000	00000000	00000000	00000000	7540FDD5	8EBFAAD6	00000000	8E3FAAD6
(26560)	7540FDD5	2F3F8468	67C0B665	C8BF7CAE	7C405637	203FF0ED	8B3E5091	00000000	CBBF3AB1	6A406ADE
(26600)	206A616E	01000000	8644B8FE	884332B3	5543BCBD	25432FE5	5C44E7FD	6944C21E	C3C13602	A9C13278
(26640)	2E42B929	C3C13602	01C270F5	0F42D19B	60000000	01000000	A5791800	00000000	9A020000	01000000
(26680)	3761E424	00000000	66110000	5A426789	594219FE	4F43FCCE	6C447C2F	F83FDFB0	4340BAC8	893F05F9
(26720)	4CBF382C	153EF70D	77BF9A19	0B000000	60010000	00000000	20B81800	71431818	2DC1A489	07C9C864
(26760)	1D491CEB	03497017	754914E0	E648C066	2949DCDB	DFC2A0B6	DFC3AEA5	6AC904E7	9B498691	5BC73051
(26800)	80400000	00000000	00000000	00000000	75405AE3	8EBF887A	00000000	8E3F887A	75405AE3	2F3FE46E
(26840)	67C07565	C8BF44AE	7C400F37	203FC8F3	8B3E6096	00000000	CBBF3AB1	6A406ADE	206A616E	01000000
(26880)	8644B8FE	884332B3	4F43AB7F	16436CDB	6C4439DD	744459BF	93C1A522	E1C19265	2B428F7C	93C1A522
(26920)	1BC2C7F7	0542F359	60000000	01000000	90B51800	00000000	9A020000	01000000	4361E424	00000000
(26960)	66110000	5A429298	5A424F51	57438D2E	684410BC	6B3F0040	833F8908	353F8908	50BFD882	EBBE9A99
(27000)	B43E17EC	0A000000	40010000	00000000	20B81800	71431818	2DC1A489	07C9C864	1D491CEB	03497017
(27040)	754914E0	E648C066	2949DCDB	DFC2A0B6	DFC3AEA5	6AC904E7	9B498691	5BC73051	80400000	00000000
(27080)	00000000	00000000	75405AE3	8EBF887A	00000000	8E3F887A	75405AE3	2F3FE46E	67C07565	C8BF44AE
(27120)	7C400F37	203FC8F3	8B3E6096	00000000	CBBF3AB1	6A406ADE	206A616E	01000000	8644B8FE	884332B3
(27160)	5643DAFF	1F4350E0	69442D77	72444AA8	99C158B3	CFC10D74	30428E0F	99C158B3	14C2999F	0C42D43D

HEX DUMP OF DD108778

(0)	60000000	1F000000	F2F0AF04	00000000	9D020000	01000000	9B3D0425	00000000	66000000	874199D8
(40)	8741FCCE	5CC1110B	5644CD14	373DB70D	3A3D9254	473C250C	4C3CB76D	A63A92E4	AC3BDB06	08000000
(80)	00010000	1E000000	4057AF04	62C330B6	0BC46452	934890CC	11C9B47E	9EC8503E	3549405B	B7C8B0EF
(120)	09C91CBC	60C2D266	8FC3B0DF	95C9E427	8149587C	03C85F40	80400000	00000000	00000000	00000000
(160)	6240FE98	EEBF4E3D	00000000	EE3F4E3D	6240FE98	29404803	30C00168	98BF74FD	40400E47	1B40D80F
(200)	863F9C7A	00000000	CBBF3AB1	6A406ADE	206A616E	1F000000	8644B8FE	884332B3	66C1B93F	93C22529
(240)	5644ED0C	5144A75F	60C1729A	17C1F9C8	88BFBA59	60C1729A	FCC0C2D7	ABC05E6D	60000000	1F000000
(280)	E222B004	00000000	9D020000	01000000	A53D0425	00000000	66110000	864155B3	86418BAA	88C1B1DF
(320)	5A44EFEE	8C3C9A59	273CCD4C	B53CE620	34BC0080	CCBA33F3	E83B9AC9	05000000	A0000000	1E000000
(360)	4057AF04	62C330B6	0BC46452	934890CC	11C9B47E	9EC8503E	3549405B	B7C8B0EF	09C91CBC	60C2D266
(400)	8FC3B0DF	95C9E427	8149587C	03C85F40	80400000	00000000	00000000	00000000	6240FE98	EEBF4E3D
(440)	00000000	EE3F4E3D	6240FE98	29404803	30C00168	98BF74FD	40400E47	1B40D80F	863F9C7A	00000000
(480)	CBBF3AB1	6A406ADE	206A616E	1F000000	8644B8FE	884332B3	8FC10C58	A9C22301	5A4462E5	5544EEB6
(520)	50C13BFA	28C18499	A8BFB348	50C13BFA	0BC18B72	C2C04924	60000000	1F000000	CE54B004	00000000
(560)	9D020000	01000000	AF3D0425	00000000	66110000	8741C503	864187FA	D1C10CA3	5C449555	803C00A0
(600)	BA3B00A0	613D00B9	1BBC0020	F0BC00FA	913C0034	02000000	40000000	1E000000	4057AF04	62C330B6
(640)	0BC46452	934890CC	11C9B47E	9EC8503E	3549405B	B7C8B0EF	09C91CBC	60C2D266	8FC3B0DF	95C9E427
(680)	8149587C	03C85F40	80400000	00000000	00000000	00000000	6240FE98	EEBF4E3D	00000000	EE3F4E3D

(720)	6240FE98	29404803	30C00168	98BF74FD	40400E47	1B40D80F	863F9C7A	00000000	CBBF3AB1	6A406ADE
(760)	206A616E	1F000000	8644B8FE	884332B3	D8C1C27D	BEC25320	5C441347	56444020	4CC19B85	2DC1594F
(800)	FEBF4D6A	4CC19B85	0AC1649B	D9C0BE95	60000000	1F000000	B2A4B004	02000000	9D020000	01000000
(840)	BF3D0425	00000000	66000000	8941A2C2	8941A2C2	00C20B9E	5944B16F	00000000	00000000	00000000
(880)	00000000	00000000	00000000	01000000	20000000	1E000000	A041B004	62C300CC	0BC4F193	934860F6
(920)	11C9B879	9EC8882C	3549E85B	B7C8F0DA	09C9ACB8	61C23D2D	90C3F85A	95C97C27	8149D27C	03C85F40
(960)	80400000	00000000	00000000	00000000	62403E90	EEBF965E	00000000	EE3F965E	62403E90	2940E403
(1000)	30C08367	98BF08FD	40408646	1B406610	863F187B	00000000	CBBF3AB1	6A406ADE	206A616E	1F000000
(1040)	8644B8FE	884332B3	03C230A4	BFC2C4C6	5944835D	52444D96	58C19EB9	25C1A77D	1DC0C8B6	58C19EB9
(1080)	00C1E61A	DFC013E2	60000000	1F000000	9FE0B004	00000000	9D020000	01000000	CB3D0425	00000000
(1120)	66000000	8B41FFBB	8B418118	82C1FC3E	53441505	D43E3986	563E8E47	883E743D	82BE5511	A1BEC7CD
(1160)	633E0E5F	09000000	20010000	1E000000	A041B004	62C300CC	0BC4F193	934860F6	11C9B879	9EC8882C
(1200)	3549E85B	B7C8F0DA	09C9ACB8	61C23D2D	90C3F85A	95C97C27	8149D27C	03C85F40	80400000	00000000
(1240)	00000000	00000000	62403E90	EEBF965E	00000000	EE3F965E	62403E90	2940E403	30C08367	98BF08FD
(1280)	40408646	1B406610	863F187B	00000000	CBBF3AB1	6A406ADE	206A616E	1F000000	8644B8FE	884332B3
(1320)	86C12F77	8DC27385	5244A5FB	4E44BC2C	6DC1A5DB	0EC1CAD2	A3BFC312	6DC1A5DB	E9C029D2	A9C05A11
(1360)	60000000	1F000000	6680B104	00000000	9D020000	01000000	EB3D0425	00000000	66000000	9141C8C2
(1400)	9141E4B7	DC3F4508	4F441708	5D3D0070	203C0070	753DA17A	BCBC00A0	69BD802A	C63C207C	02000000
(1440)	40000000	1E000000	A041B004	62C300CC	0BC4F193	934860F6	11C9B879	9EC8882C	3549E85B	B7C8F0DA
(1480)	09C9ACB8	61C23D2D	90C3F85A	95C97C27	8149D27C	03C85F40	80400000	00000000	00000000	00000000
(1520)	62403E90	EEBF965E	00000000	EE3F965E	62403E90	2940E403	30C08367	98BF08FD	40408646	1B406610
(1560)	863F187B	00000000	CBBF3AB1	6A406ADE	206A616E	1F000000	8644B8FE	884332B3	AB3FDF1A	3EC2D5A2
(1600)	4F442D09	4C445473	81C1D7CA	04C13C78	D93DD594	81C1D7CA	ECC0C30E	70C0F3AC	60000000	1F000000
(1640)	4DCBB104	00000000	9D020000	01000000	FA3D0425	00000000	66000000	9841C5C6	9841C5C3	4741B3E0
(1680)	4A4447ED	153D5535	8D3CABD2	143B0028	853B55D5	0FBC5555	E6B90080	04000000	80000000	1E000000
(1720)	A041B004	62C300CC	0BC4F193	934860F6	11C9B879	9EC8882C	3549E85B	B7C8F0DA	09C9ACB8	61C23D2D
(1760)	90C3F85A	95C97C27	8149D27C	03C85F40	80400000	00000000	00000000	00000000	62403E90	EEBF965E
(1800)	00000000	EE3F965E	62403E90	2940E403	30C08367	98BF08FD	40408646	1B406610	863F187B	00000000
(1840)	CBBF3AB1	6A406ADE	206A616E	1F000000	8644B8FE	884332B3	44413830	F6C1CF6B	4A44D8F4	4944C9E5
(1880)	8CC1F976	EDC0AAFD	823F95B5	8CC1F976	E1C0ACD6	23C0C9C2	60000000	1F000000	370CB204	00000000
(1920)	9D020000	01000000	073E0425	00000000	66110000	9841E6E1	98417BD5	5D418252	49440FC7	D23BE879
(1960)	9C3DDBB6	3D3C6E63	8E3CC3B0	063BC330	843C92C4	07000000	E0000000	1E000000	6016B204	62C328F7
(2000)	0CC43A17	9448004A	11C9C06F	9EC8E808	3549385D	B7C828B2	09C980B1	62C2E3BA	91C39A51	95C9AC26
(2040)	8149C07D	03C85F40	80400000	00000000	00000000	00000000	62400E7F	EEBFE09F	00000000	EE3FE09F
(2080)	62400E7F	29401905	30C08A66	98BF30FC	40407645	1B408211	863F0E7C	00000000	CBBF3AB1	6A406ADE
(2120)	206A616E	1F000000	8644B8FE	884332B3	5A41FE50	DCC1BFEE	494475CF	49448801	8DC177A4	E2C016BB
(2160)	913F5780	8DC177A4	D9C0B78D	12C0C6F9	60000000	1F000000	FEABB204	00000000	9D020000	01000000
(2200)	273E0425	00000000	66000000	9A418C55	9A419E53	1E40E3F5	4E44AF57	A33B0080	293A0000	923C2F86
(2240)	EA3A0000	1A3C0075	5E3B00DD	02000000	40000000	1E000000	6016B204	62C328F7	0CC43A17	9448004A
(2280)	11C9C06F	9EC8E808	3549385D	B7C828B2	09C980B1	62C2E3BA	91C39A51	95C9AC26	8149C07D	03C85F40
(2320)	80400000	00000000	00000000	00000000	62400E7F	EEBFE09F	00000000	EE3FE09F	62400E7F	29401905
(2360)	30C08A66	98BF30FC	40407645	1B408211	863F0E7C	00000000	CBBF3AB1	6A406ADE	206A616E	1F000000
(2400)	8644B8FE	884332B3	0840301E	37C23E50	4E443B59	4B4415E5	8AC1AB49	08C1E6FB	373E9450	8AC1AB49
(2440)	F5C03910	75C0763C	60000000	1F000000	D41EB304	00000000	9D020000	01000000	3E3E0425	00000000
(2480)	66000000	9D412413	9D41F211	49C085D7	5144382E	493C0000	993C0000	F73B3003	773C00E0	1D3C007B
(2520)	423C006A	02000000	40000000	1E000000	6016B204	62C328F7	0CC43A17	9448004A	11C9C06F	9EC8E808
(2560)	3549385D	B7C828B2	09C980B1	62C2E3BA	91C39A51	95C9AC26	8149C07D	03C85F40	80400000	00000000
(2600)	00000000	00000000	62400E7F	EEBFE09F	00000000	EE3FE09F	62400E7F	29401905	30C08A66	98BF30FC
(2640)	40407645	1B408211	863F0E7C	00000000	CBBF3AB1	6A406ADE	206A616E	1F000000	8644B8FE	884332B3
(2680)	67C0B258	5FC2043C	51446D2C	4D44B3E5	89C1D720	19C1521C	9EBED48B	89C1D720	05C1DA27	97C0557C
(2720)	60000000	1F000000	C05AB304	00000000	9D020000	01000000	4A3E0425	00000000	66000000	9741D341
(2760)	97413635	1D416421	4F44A887	6F3C0000	B23D0058	823C909C	12BD0008	793C00EA	18BD809F	02000000
(2800)	40000000	1E000000	6016B204	62C328F7	0CC43A17	9448004A	11C9C06F	9EC8E808	3549385D	B7C828B2
(2840)	09C980B1	62C2E3BA	91C39A51	95C9AC26	8149C07D	03C85F40	80400000	00000000	00000000	00000000
(2880)	62400E7F	EEBFE09F	00000000	EE3FE09F	62400E7F	29401905	30C08A66	98BF30FC	40407645	1B408211
(2920)	863F0E7C	00000000	CBBF3AB1	6A406ADE	206A616E	1F000000	8644B8FE	884332B3	1641E7B6	25C2A107
(2960)	4F44828D	4D4484CA	85C107F2	0BC1D6C4	463F43D1	85C107F2	01C1B973	58C0B896	60000000	1F000000
(3000)	A6A5B304	00000000	9D020000	01000000	593E0425	00000000	66000000	9A41A99F	9A41639F	644170F8
(3040)	5044C1FF	A83B0000	B4390000	00000000	AEBA0000	80B70000	90360000	02000000	40000000	1E000000
(3080)	20EBB304	63C3A421	0CC4C09A	9448989D	11C9BC65	9DC840E5	3549885E	B7C8708A	09C9F4A9	64C29549

(22320)	9D020000	01000000	12470425	00000000	66000000	834183FE	83413CE4	8CC271A8	5744D52F	3C3A0000
(22360)	223D00D0	303EC0A3	AEBB00A0	353C00F0	A9BD0094	02000000	40000000	1E000000	C0F2DE04	66C3903C
(22400)	18C478ED	9C485040	10C97871	9AC8E894	35495C7F	B5C80810	08C9F088	84C2B8E5	A9C3B808	95C9F2F0
(22440)	80493696	03C8EC90	80400000	00000000	00000000	00000000	6140D565	F2BFE0BF	00000000	F23FE0BF
(22480)	6140D565	2940C422	30C0994E	98BF6CE7	40405E2B	1B40B92C	863FA893	00000000	CBBF3AB1	6A406ADE
(22520)	206A616E	1F000000	8644B8FE	884332B3	8EC2B102	FEC274BF	57448106	4B44135A	4DC10CBA	10C1FD2F
(22560)	A0C0FED8	4DC10CBA	B1C03AA4	0BC1112C	60000000	1F000000	5760DF04	02000000	9D020000	01000000
(22600)	1B470425	00000000	66000000	87410925	87416F21	89C28A14	5A44DD0B	E83A0000	D5395555	AB3C55F1
(22640)	A0B90000	28BB5555	05BBAB2A	03000000	60000000	1E000000	C0F2DE04	66C3903C	18C478ED	9C485040
(22680)	10C97871	9AC8E894	35495C7F	B5C80810	08C9F088	84C2B8E5	A9C3B808	95C9F2F0	80493696	03C8EC90
(22720)	80400000	00000000	00000000	00000000	6140D565	F2BFE0BF	00000000	F23FE0BF	6140D565	2940C422
(22760)	30C0994E	98BF6CE7	40405E2B	1B40B92C	863FA893	00000000	CBBF3AB1	6A406ADE	206A616E	1F000000
(22800)	8644B8FE	884332B3	8AC26FA2	02C332CC	594458E4	4E445B76	4BC1D399	1EC10174	A1C07700	4BC1D399
(22840)	CAC06AB0	12C1F000	60000000	1F000000	429CDF04	02000000	9D020000	01000000	27470425	00000000
(22880)	66110000	8441ACF8	84413CBE	7EC27EFD	5F441717	AC3B0040	093C0080	EE3EA09A	D93B00C0	4ABD00D0
(22920)	80BD0012	02000000	40000000	1E000000	C0F2DE04	66C3903C	18C478ED	9C485040	10C97871	9AC8E894
(22960)	35495C7F	B5C80810	08C9F088	84C2B8E5	A9C3B808	95C9F2F0	80493696	03C8EC90	80400000	00000000
(23000)	00000000	00000000	6140D565	F2BFE0BF	00000000	F23FE0BF	6140D565	2940C422	30C0994E	98BF6CE7
(23040)	40405E2B	1B40B92C	863FA893	00000000	CBBF3AB1	6A406ADE	206A616E	1F000000	8644B8FE	884332B3
(23080)	81C24A65	06C3B3FD	5E44D6F3	5444D448	3AC17E9F	2DC15DBD	93C0C6E8	3AC17E9F	EBC0A3D0	13C1D37C
(23120)	60000000	1F000000	33CEDF04	00000000	9D020000	01000000	31470425	00000000	66000000	8841DB8A
(23160)	88418E56	81C27E5A	5D44D505	743D0000	A03DAB92	343E8027	69BDAB4A	333DAB3E	59BDAB06	04000000
(23200)	80000000	1E000000	C0F2DE04	66C3903C	18C478ED	9C485040	10C97871	9AC8E894	35495C7F	B5C80810
(23240)	08C9F088	84C2B8E5	A9C3B808	95C9F2F0	80493696	03C8EC90	80400000	00000000	00000000	00000000
(23280)	6140D565	F2BFE0BF	00000000	F23FE0BF	6140D565	2940C422	30C0994E	98BF6CE7	40405E2B	1B40B92C
(23320)	863FA893	00000000	CBBF3AB1	6A406ADE	206A616E	1F000000	8644B8FE	884332B3	83C2231D	04C33168
(23360)	5C4470E1	52442104	45C15CC9	2BC10936	99C093E0	45C15CC9	E4C06288	14C180EA		

HEX DUMP OF DD108778

(0)	60000000	20000000	08501500	00000000	9D020000	01000000	97590425	00000000	66110000	8841D8C2
(40)	8841BC84	DD413022	4F448463	7C3DD145	5E3EE952	7F3C10BE	CEBD00C0	90BBE183	313CC247	0C000000
(80)	80010000	1F000000	40241400	66C3DCFF	33440DD5	AC48C03E	0EC90031	93C86847	3549C0D1	B7C8686B
(120)	03C9D043	ADC2100A	DAC31E6F	97C91C80	7D493488	04C8272D	80400000	00000000	00000000	00000000
(160)	6240A4B3	EDBFCED7	00000000	ED3FCED7	6240A4B3	2940425F	30C0B11D	98BF02BD	3F400FF6	1B403964
(200)	863FCAC3	00000000	CBBF3AB1	6A406ADE	20666562	01000000	8644B8FE	884332B3	D9411EEE	C5C1BDBB
(240)	4F44F073	4F443D97	70C1B094	F9C061F9	01408C82	70C1B094	FBC05372	EBBFEE1C	60000000	20000000
(280)	F48B1500	00000000	9D020000	01000000	A3590425	00000000	66110000	8A41C747	8941EEC7	DE41A843
(320)	4E442DC4	123ED105	EA3E1026	9E3C080F	5BBEA3EB	AE3C934D	28BD84FF	0C000000	80010000	1F000000
(360)	40241400	66C3DCFF	33440DD5	AC48C03E	0EC90031	93C86847	3549C0D1	B7C8686B	03C9D043	ADC2100A
(400)	DAC31E6F	97C91C80	7D493488	04C8272D	80400000	00000000	00000000	00000000	6240A4B3	EDBFCED7
(440)	00000000	ED3FCED7	6240A4B3	2940425F	30C0B11D	98BF02BD	3F400FF6	1B403964	863FCAC3	00000000
(480)	CBBF3AB1	6A406ADE	20666562	01000000	8644B8FE	884332B3	DB41883E	BCC1F552	4E44B8D4	4F440D0B
(520)	74C1BB23	F6C087FA	0340F57D	74C1BB23	F9C01841	E2BF5509	60000000	20000000	DCC71500	00000000
(560)	9D020000	01000000	AF590425	00000000	66110000	8E419E26	8D4139FB	B8413F34	4C4447E5	623D7CF0
(600)	163EE1DB	793C9BD4	9DBDE9A2	173CAB2A	81BC36B9	0C000000	80010000	1F000000	00F91500	66C33CED
(640)	33447E48	AC48B08F	0EC9B024	93C82821	354990D3	B7C8E891	03C9481E	ADC2B8CE	DBC3AA70	97C9507F
(680)	7D491C8A	04C8272D	80400000	00000000	00000000	00000000	6240E8C6	EDBF4E8E	00000000	ED3F4E8E
(720)	6240E8C6	29407660	30C0B71C	98BF2ABC	3F40FEF4	1B405565	863FC0C4	00000000	CBBF3AB1	6A406ADE

(760)	20666562	01000000	8644B8FE	884332B3	B54110BD	C4C1C0B8	4C4412F3	4C4452D8	80C18819	EEC0CC62
(800)	E03F2ECF	80C18819	EDC00A40	F3BF6146	60000000	20000000	CB031600	00000000	9D020000	01000000
(840)	BB590425	00000000	66110000	8C416192	8C41096D	CA41CED1	504483E1	DB3CF8E0	8D3D65B3	DD3D6D02
(880)	95BC6DB2	E8BC4657	88BB3E78	0C000000	80010000	1F000000	00F91500	66C33CED	33447E48	AC48B08F
(920)	0EC9B024	93C82821	354990D3	B7C8E891	03C9481E	ADC2B8CE	DBC3AA70	97C9507F	7D491C8A	04C8272D
(960)	80400000	00000000	00000000	00000000	6240E8C6	EDBF4E8E	00000000	ED3F4E8E	6240E8C6	29407660
(1000)	30C0B71C	98BF2ABC	3F40FEF4	1B405565	863FC0C4	00000000	CBBF3AB1	6A406ADE	20666562	01000000
(1040)	8644B8FE	884332B3	C741B12D	E9C13ABE	504478F0	5044DDB4	74C16D55	07C13119	F33F5D9A	74C16D55
(1080)	05C10ACE	0EC011D5	60000000	20000000	B63F1600	00000000	9D020000	01000000	C7590425	00000000
(1120)	66110000	8B41A39C	8B41CD68	04429308	504414E8	733D103E	2F3E7C90	C73C9345	AEBD8C6E	50BC1F7C
(1160)	D13C9B6C	0C000000	80010000	1F000000	00F91500	66C33CED	33447E48	AC48B08F	0EC9B024	93C82821
(1200)	354990D3	B7C8E891	03C9481E	ADC2B8CE	DBC3AA70	97C9507F	7D491C8A	04C8272D	80400000	00000000
(1240)	00000000	00000000	6240E8C6	EDBF4E8E	00000000	ED3F4E8E	6240E8C6	29407660	30C0B71C	98BF2ABC
(1280)	3F40FEF4	1B405565	863FC0C4	00000000	CBBF3AB1	6A406ADE	20666562	01000000	8644B8FE	884332B3
(1320)	02423A35	B2C1BB69	504497FB	51446D88	71C1E671	05C181BD	1D4035E0	71C1E671	08C140C9	D8BFF0B5
(1360)	60000000	20000000	A17B1600	00000000	9D020000	01000000	D3590425	00000000	66110000	8B41FD45
(1400)	8A4161F6	00423F10	4F449C28	923D0000	943EE12B	DE3C3EE8	EDBDF0C1	203B8C2E	633C840F	0C000000
(1440)	80010000	1F000000	00F91500	66C33CED	33447E48	AC48B08F	0EC9B024	93C82821	354990D3	B7C8E891
(1480)	03C9481E	ADC2B8CE	DBC3AA70	97C9507F	7D491C8A	04C8272D	80400000	00000000	00000000	00000000
(1520)	6240E8C6	EDBF4E8E	00000000	ED3F4E8E	6240E8C6	29407660	30C0B71C	98BF2ABC	3F40FEF4	1B405565
(1560)	863FC0C4	00000000	CBBF3AB1	6A406ADE	20666562	01000000	8644B8FE	884332B3	FC4145FD	A2C12E65
(1600)	4F44AA3B	4F44CDD9	74C1CDC4	FBC000F2	184027E9	74C1CDC4	01C14E54	C4BFE8AC	60000000	20000000
(1640)	8CB71600	00000000	9D020000	01000000	DF590425	00000000	66110000	8C41BBDC	8C41FCB0	DC41AD91
(1680)	4E44F982	5E3D6593	173E0050	1E3CF081	AABD0040	0BBCD964	2B3C6D72	0C000000	80010000	1F000000
(1720)	00F91500	66C33CED	33447E48	AC48B08F	0EC9B024	93C82821	354990D3	B7C8E891	03C9481E	ADC2B8CE
(1760)	DBC3AA70	97C9507F	7D491C8A	04C8272D	80400000	00000000	00000000	00000000	6240E8C6	EDBF4E8E
(1800)	00000000	ED3F4E8E	6240E8C6	29407660	30C0B71C	98BF2ABC	3F40FEF4	1B405565	863FC0C4	00000000
(1840)	CBBF3AB1	6A406ADE	20666562	01000000	8644B8FE	884332B3	D941B19F	B9C14AE4	4E446893	4E4436CB
(1880)	79C1CFE1	F9C0D7FF	05402748	79C1CFE1	FCC09361	E3BF22D7	60000000	20000000	77F31600	00000000
(1920)	9D020000	01000000	EB590425	00000000	66110000	8C415D50	8C410C2F	CA41D6DD	5044EE8C	143D5555
(1960)	B53DF880	223D0004	45BD9BEC	843A103E	FEBB1F7C	0C000000	80010000	1F000000	00F91500	66C33CED
(2000)	33447E48	AC48B08F	0EC9B024	93C82821	354990D3	B7C8E891	03C9481E	ADC2B8CE	DBC3AA70	97C9507F
(2040)	7D491C8A	04C8272D	80400000	00000000	00000000	00000000	6240E8C6	EDBF4E8E	00000000	ED3F4E8E
(2080)	6240E8C6	29407660	30C0B71C	98BF2ABC	3F40FEF4	1B405565	863FC0C4	00000000	CBBF3AB1	6A406ADE
(2120)	20666562	01000000	8644B8FE	884332B3	C7418052	E5C1FA4D	5044EA9B	50440E68	74C105AF	05C1BC74
(2160)	F33F975B	74C105AF	04C1F055	0BC08BE4	60000000	20000000	622F1700	00000000	9D020000	01000000
(2200)	F7590425	00000000	66110000	8C417974	8C413B36	D94179D8	50444A1E	453D2FBA	6F3E46C7	8F3C936D
(2240)	C3BDB249	98BC9B2C	2D3D93FD	0C000000	80010000	1F000000	60E31600	66C394E3	33443A02	AC4828B8
(2280)	0EC9841E	93C8000E	35497CD4	B7C880A5	03C95C0B	AEC2C830	DBC382F1	97C9EA7E	7D49108B	04C8272D
(2320)	80400000	00000000	00000000	00000000	6240B6D0	EDBFD868	00000000	ED3FD868	6240B6D0	29401261
(2360)	30C0391C	98BFBCBB	3F4075F4	1B40E365	863F3CC5	00000000	CBBF3AB1	6A406ADE	20666562	01000000
(2400)	8644B8FE	884332B3	D641626D	D1C108AA	50446A2E	5044AC36	75C1397E	03C17587	0240B3E2	75C1397E
(2440)	03C100B5	FFBF67FB	60000000	20000000	4D6B1700	00000000	9D020000	01000000	035A0425	00000000
(2480)	66110000	8A416CAA	8A410B63	0742E1FF	4F44C2DB	D23DF041	6F3E840F	E23C3EB8	E9BDC207	143B3EF8
(2520)	9D384617	0C000000	80010000	1F000000	60E31600	66C394E3	33443A02	AC4828B8	0EC9841E	93C8000E
(2560)	35497CD4	B7C880A5	03C95C0B	AEC2C830	DBC382F1	97C9EA7E	7D49108B	04C8272D	80400000	00000000
(2600)	00000000	00000000	6240B6D0	EDBFD868	00000000	ED3FD868	6240B6D0	29401261	30C0391C	98BFBCBB
(2640)	3F4075F4	1B40E365	863F3CC5	00000000	CBBF3AB1	6A406ADE	20666562	01000000	8644B8FE	884332B3
(2680)	0642D153	9DC1320D	4F44F3EF	504442B1	71C102E6	00C1C647	21401EA4	71C102E6	04C1D764	BDBF986E
(2720)	60000000	20000000	38A71700	00000000	9D020000	01000000	0F5A0425	00000000	66110000	8A41A9F8
(2760)	8A4152C9	174239F5	5044D6AE	613D74D1	1A3E6D42	F33C46E7	97BDD964	AFBB2FBA	38BB5555	0C000000
(2800)	80010000	1F000000	60E31600	66C394E3	33443A02	AC4828B8	0EC9841E	93C8000E	35497CD4	B7C880A5
(2840)	03C95C0B	AEC2C830	DBC382F1	97C9EA7E	7D49108B	04C8272D	80400000	00000000	00000000	00000000
(2880)	6240B6D0	EDBFD868	00000000	ED3FD868	6240B6D0	29401261	30C0391C	98BFBCBB	3F4075F4	1B40E365
(2920)	863F3CC5	00000000	CBBF3AB1	6A406ADE	20666562	01000000	8644B8FE	884332B3	1642032A	8AC191F1
(2960)	50445BC5	514452DA	70C1C50C	03C158CF	3540BC0E	70C1C50C	09C19BC5	A8BF821E	60000000	20000000
(3000)	23E31700	00000000	9D020000	01000000	1B5A0425	00000000	66110000	89418FAA	89413173	03421F64
(3040)	5344B2D1	C03DB289	203E8C3E	D73C8CF6	C3BD6DB2	D83BA38B	553C271B	0C000000	80010000	1F000000
(3080)	60E31600	66C394E3	33443A02	AC4828B8	0EC9841E	93C8000E	35497CD4	B7C880A5	03C95C0B	AEC2C830
(3120)	DBC382F1	97C9EA7E	7D49108B	04C8272D	80400000	00000000	00000000	00000000	6240B6D0	EDBFD868

(27160)	69C2835E	11C257EA	0F42E065	674220D3	12413B94	B83FD5EF	1AC0B873	12413B94	17400183	C2BF2D6C

HEX DUMP OF DD108778

(0)	60000000	3D000000	9DF92F00	00000000	9F020000	01000000	DF472225	00000000	66000000	6141ED43
(40)	6141A623	D7C00990	94442C6B	593D62E8	693D6258	043D4B35	E5BCF4BC	A73C182C	833CC328	07000000
(80)	E0000000	3C000000	809B2F00	37430849	BFC3E68F	E84878C8	2F49EC8C	10497408	7F49E42A	8C487028
(120)	5749E0FD	57C2D028	EDC374FB	81C934E1	9449A00A	0EC81554	80400000	00000000	00000000	00000000
(160)	57401688	0AC05923	00000000	0A405923	57401688	7140A2A9	9ABFB2FE	06BFBC6B	A83F98F0	5D4004B7
(200)	C03FD048	00000000	CBBF3AB1	6A406ADE	206D6172	01000000	86448842	894328DC	06C1C447	F6C20158
(240)	94448D6C	9644E9D8	CB40A338	48C178BC	03BFACE1	CB40A338	24C1608E	E6C0B483	60000000	3D000000
(280)	88353000	00000000	9F020000	01000000	EB472225	00000000	66110000	60416346	6041D124	04C132DC
(320)	944487F4	C43C729C	443CC771	323D09A8	1DBB1111	A43CC7B1	40BA0BB6	0A000000	40010000	3C000000
(360)	809B2F00	37430849	BFC3E68F	E84878C8	2F49EC8C	10497408	7F49E42A	8C487028	5749E0FD	57C2D028
(400)	EDC374FB	81C934E1	9449A00A	0EC81554	80400000	00000000	00000000	00000000	57401688	0AC05923
(440)	00000000	0A405923	57401688	7140A2A9	9ABFB2FE	06BFBC6B	A83F98F0	5D4004B7	C03FD048	00000000
(480)	CBBF3AB1	6A406ADE	206D6172	01000000	86448842	894328DC	1EC1F3F1	F6C25DCF	94443EF6	9744E282
(520)	D140FDBB	45C16FDC	1BBFCD66	D140FDBB	21C1A157	E5C00AE3	60000000	3D000000	72713000	00000000
(560)	9F020000	01000000	F7472225	00000000	66110000	5F4186C6	5F41FB49	6E418957	94444DBD	763C5BB0
(600)	763DA5CF	4F3E760D	B03B0BB6	93BC5B40	563D726C	0A000000	40010000	3C000000	809B2F00	37430849
(640)	BFC3E68F	E84878C8	2F49EC8C	10497408	7F49E42A	8C487028	5749E0FD	57C2D028	EDC374FB	81C934E1
(680)	9449A00A	0EC81554	80400000	00000000	00000000	00000000	57401688	0AC05923	00000000	0A405923
(720)	57401688	7140A2A9	9ABFB2FE	06BFBC6B	A83F98F0	5D4004B7	C03FD048	00000000	CBBF3AB1	6A406ADE
(760)	206D6172	01000000	86448842	894328DC	54413315	CBC24769	944485BA	96444652	CD40FD90	45C132CE
(800)	4E3F6983	CD40FD90	2DC14980	BFC029BD	60000000	3D000000	5EAD3000	00000000	9F020000	01000000
(840)	03482225	00000000	66110000	6541C037	65414F11	C2400165	9544811E	2E3DF549	DA3CF549	0E3D2C7D
(880)	D73A721C	ED3B3FC9	6B39F549	0A000000	40010000	3C000000	809B2F00	37430849	BFC3E68F	E84878C8
(920)	2F49EC8C	10497408	7F49E42A	8C487028	5749E0FD	57C2D028	EDC374FB	81C934E1	9449A00A	0EC81554
(960)	80400000	00000000	00000000	00000000	57401688	0AC05923	00000000	0A405923	57401688	7140A2A9
(1000)	9ABFB2FE	06BFBC6B	A83F98F0	5D4004B7	C03FD048	00000000	CBBF3AB1	6A406ADE	206D6172	01000000
(1040)	86448842	894328DC	8E40F278	DAC27F91	9544691D	97449714	D8403DA9	49C1A1C8	8E3E4764	D8403DA9
(1080)	2CC17149	D2C0E845	60000000	3D000000	4BE43000	00000000	9F020000	01000000	0E482225	00000000
(1120)	66110000	66414BE5	66419BBC	53410DF9	9544CFBB	383D55ED	E13C390E	1F3DD947	2B3B398E	6FBCAB06
(1160)	DABC72F4	09000000	20010000	3C000000	E0853000	3743301D	C0C3D601	E84820B0	2F492497	10492406
(1200)	7F49142B	8C48606D	574974F9	57C2B8DE	EEC3D87B	81C9BEE0	9449060B	0EC81554	80400000	00000000
(1240)	00000000	00000000	5740D397	0AC0C80A	00000000	0A40C80A	5740D397	7140E6A9	9ABF52FD	06BF8C6A
(1280)	A83F18EF	5D4042B7	C03F0649	00000000	CBBF3AB1	6A406ADE	206D6172	01000000	86448842	894328DC
(1320)	3A416F7F	C9C2CAC8	95443EB9	9744566F	E240B693	48C1F6AA	3B3F61AE	E240B693	2FC1D551	C4C060A7
(1360)	60000000	3D000000	32203100	00000000	9F020000	01000000	1A482225	00000000	66110000	63413E82
(1400)	63412D4A	40C0F85C	96443012	293DDE1D	643C6CC1	703D475B	903C610B	2C3C3F99	FF3AFA64	0A000000
(1440)	40010000	3C000000	E0853000	3743301D	C0C3D601	E84820B0	2F492497	10492406	7F49142B	8C48606D
(1480)	574974F9	57C2B8DE	EEC3D87B	81C9BEE0	9449060B	0EC81554	80400000	00000000	00000000	00000000
(1520)	5740D397	0AC0C80A	00000000	0A40C80A	5740D397	7140E6A9	9ABF52FD	06BF8C6A	A83F18EF	5D4042B7
(1560)	C03F0649	00000000	CBBF3AB1	6A406ADE	206D6172	01000000	86448842	894328DC	92C05393	E7C2BC10
(1600)	9644E512	9844007F	E4400042	44C18681	91BEDC5A	E4400042	23C1490A	DBC0CA92	60000000	3D000000
(1640)	1C613100	00000000	9F020000	01000000	27482225	00000000	66110000	6041B720	6041180C	1D3F582A
(1680)	9744EF8A	853CDBE6	DF3C2509	4B3CEA77	163CB7AD	2A3C52FC	C03BC96A	08000000	00010000	3C000000
(1720)	E0853000	3743301D	C0C3D601	E84820B0	2F492497	10492406	7F49142B	8C48606D	574974F9	57C2B8DE
(1760)	EEC3D87B	81C9BEE0	9449060B	0EC81554	80400000	00000000	00000000	00000000	5740D397	0AC0C80A

(1800)	00000000	0A40C80A	5740D397	7140E6A9	9ABF52FD	06BF8C6A	A83F18EF	5D4042B7	C03F0649	00000000
(1840)	CBBF3AB1	6A406ADE	206D6172	01000000	86448842	894328DC	62BFE04F	D8C2818A	9744E68A	994480E7
(1880)	F4402F9B	3BC108B8	5DBD6E3D	F4402F9B	1DC1979F	CBC0DCE6	60000000	3D000000	089D3100	02000000
(1920)	9F020000	01000000	33482225	00000000	66110000	6141EDDE	60410688	6141D5E1	9A44BD4D	D93EDE11
(1960)	623E44F4	A03DABDA	993E661A	2C3ECD3A	023E9A32	06000000	C0000000	3C000000	E0853000	3743301D
(2000)	C0C3D601	E84820B0	2F492497	10492406	7F49142B	8C48606D	574974F9	57C2B8DE	EEC3D87B	81C9BEE0
(2040)	9449060B	0EC81554	80400000	00000000	00000000	00000000	5740D397	0AC0C80A	00000000	0A40C80A
(2080)	5740D397	7140E6A9	9ABF52FD	06BF8C6A	A83F18EF	5D4042B7	C03F0649	00000000	CBBF3AB1	6A406ADE
(2120)	206D6172	01000000	86448842	894328DC	4C41D362	AFC2FAAC	9A44884A	9C443816	0B410FCF	2FC11F3F
(2160)	483F4A22	0B410FCF	1AC1A154	A7C060ED	60000000	3D000000	F0D83100	00000000	9F020000	01000000
(2200)	3F482225	00000000	66110000	62413B04	614196E5	B64197FD	9E44E075	6B3C5BB0	493DEFEE	FA3C11D1
(2240)	0BBAB660	613BC771	B5BC4A7F	0A000000	40010000	3C000000	E0853000	3743301D	C0C3D601	E84820B0
(2280)	2F492497	10492406	7F49142B	8C48606D	574974F9	57C2B8DE	EEC3D87B	81C9BEE0	9449060B	0EC81554
(2320)	80400000	00000000	00000000	00000000	5740D397	0AC0C80A	00000000	0A40C80A	5740D397	7140E6A9
(2360)	9ABF52FD	06BF8C6A	A83F18EF	5D4042B7	C03F0649	00000000	CBBF3AB1	6A406ADE	206D6172	01000000
(2400)	86448842	894328DC	AE41D049	85C2C06E	9E440770	9F4452AA	24415721	19C137B9	AB3FD787	24415721
(2440)	0DC18605	81C06EAB	60000000	3D000000	DD143200	02000000	9F020000	01000000	4B482225	00000000
(2480)	66110000	5F41E9FD	5F4150F1	884181C6	9E44D58E	3E3C6EDB	B63C0000	4B3C0056	5DBB2549	323B0020
(2520)	7ABC0020	08000000	00010000	3C000000	E0853000	3743301D	C0C3D601	E84820B0	2F492497	10492406
(2560)	7F49142B	8C48606D	574974F9	57C2B8DE	EEC3D87B	81C9BEE0	9449060B	0EC81554	80400000	00000000
(2600)	00000000	00000000	5740D397	0AC0C80A	00000000	0A40C80A	5740D397	7140E6A9	9ABF52FD	06BF8C6A
(2640)	A83F18EF	5D4042B7	C03F0649	00000000	CBBF3AB1	6A406ADE	206D6172	01000000	86448842	894328DC
(2680)	80410720	8FC27443	9E447A8A	A0445213	23415999	18C1451F	7A3FE52F	23415999	08C1018B	89C034B8
(2720)	60000000	3D000000	C9503200	00000000	9F020000	01000000	57482225	00000000	66000000	63419049
(2760)	63410A30	22410AE1	9E44C0B9	BE3CB74D	393D6E5B	DA3CA976	1CBC4952	8F3CB7BD	32BC4986	08000000
(2800)	00010000	3C000000	A05A3200	364384C5	C0C36AE5	E848707F	2F4994AB	10498001	7F496C2B	8C4878F8
(2840)	574954F0	59C22E49	EFC3B87C	82C9444A	934986AC	0EC86E4B	80400000	00000000	00000000	00000000
(2880)	5740A6B7	09C007D9	00000000	094007D9	5740A7B7	71406CAA	9ABF8EFA	06BF2468	A83F16EC	5D40BEB7
(2920)	C03F7249	00000000	CBBF3AB1	6A406ADE	206D6172	01000000	86448842	894328DC	1141B8C1	9AC20963
(2960)	9E442EB7	A044C39D	2741F92E	19C1CB90	103F1973	2741F92E	06C14643	96C0502A	60000000	3D000000
(3000)	B58C3200	00000000	9F020000	01000000	63482225	00000000	66110000	63419D17	6341AB02	1E408790
(3040)	9D44FAB0	1D3D00A0	4D3CDBF6	6D3CE6A3	F63A6EDB	953B2555	36BCDB6D	08000000	00010000	3C000000
(3080)	A05A3200	364384C5	C0C36AE5	E848707F	2F4994AB	10498001	7F496C2B	8C4878F8	574954F0	59C22E49
(3120)	EFC3B87C	82C9444A	934986AC	0EC86E4B	80400000	00000000	00000000	00000000	5740A6B7	09C007D9
(3160)	00000000	094007D9	5740A7B7	71406CAA	9ABF8EFA	06BF2468	A83F16EC	5D40BEB7	C03F7249	00000000
(3200)	CBBF3AB1	6A406ADE	206D6172	01000000	86448842	894328DC	AB3F92AD	AFC2E359	9D446EB0	A044490D
(3240)	21410A93	1FC14F74	AA3DAD0C	21410A93	07C13414	A9C0AD7B	60000000	3D000000	A5B43200	00000000
(3280)	9F020000	01000000	6B482225	00000000	66110000	65415CB5	6541BF8B	18BF8468	9D44E190	833CEFEE
(3320)	113D6666	9F3D3359	6CBCCDCC	053C5E30	D8BC9ACC	06000000	C0000000	3C000000	A05A3200	364384C5
(3360)	C0C36AE5	E848707F	2F4994AB	10498001	7F496C2B	8C4878F8	574954F0	59C22E49	EFC3B87C	82C9444A
(3400)	934986AC	0EC86E4B	80400000	00000000	00000000	00000000	5740A6B7	09C007D9	00000000	094007D9
(3440)	5740A7B7	71406CAA	9ABF8EFA	06BF2468	A83F16EC	5D40BEB7	C03F7249	00000000	CBBF3AB1	6A406ADE
(3480)	206D6172	01000000	86448842	894328DC	DEBF4CA9	B5C24AC5	9D441D91	A044851A	2241E4AF	21C1F9ED
(3520)	DFBDFB02	2241E4AF	07C1DB82	B1C0F152	60000000	3D000000	8BFF3200	00000000	9F020000	01000000
(3560)	7A482225	00000000	66110000	6641DD66	66415B4F	FDC0096F	9D44A839	923CBC7B	F53C00C0	313CA208
(3600)	7A3CDE5D	693BEFEE	EC3BAB9A	06000000	C0000000	3C000000	A05A3200	364384C5	C0C36AE5	E848707F
(3640)	2F4994AB	10498001	7F496C2B	8C4878F8	574954F0	59C22E49	EFC3B87C	82C9444A	934986AC	0EC86E4B
(3680)	80400000	00000000	00000000	00000000	5740A6B7	09C007D9	00000000	094007D9	5740A7B7	71406CAA
(3720)	9ABF8EFA	06BF2468	A83F16EC	5D40BEB7	C03F7249	00000000	CBBF3AB1	6A406ADE	206D6172	01000000
(3760)	86448842	894328DC	11C1535D	C5C21B5A	9D44BB3B	A0441030	21413D34	24C1C43B	12BF830A	21413D34
(3800)	05C1CC79	C0C06140	60000000	3D000000	7B313300	02000000	9F020000	01000000	84482225	00000000
(3840)	66000000	6441C305	6341C6E6	294107A2	9C44BC8C	7C3B0000	603DABCA	7C3DF3A1	C4BB0080	793C00C8
(3880)	00BD55F8	03000000	60000000	3C000000	00453300	3643B899	C1C31257	E8481867	2F49CCB5	0F4930FF
(3920)	7F499C2B	8D48983E	5749A0EB	59C2BAFD	EFC336FD	82C9CE49	9349EEAC	0EC86E4B	80400000	00000000
(3960)	00000000	00000000	5740BCC7	09C0D8BF	00000000	0940D8BF	5740BCC7	7140B0AA	9ABF2EF9	06BFF466
(4000)	A83F94EA	5D40FBB7	C03FA849	00000000	CBBF3AB1	6A406ADE	206D6172	01000000	86448842	894328DC
(4040)	16415A4D	A7C28CE4	9C44318A	9E446A7B	1B417A87	26C11052	153F786B	1B417A87	11C11737	A3C0E13E
(4080)	60000000	3D000000	617C3300	00000000	9F020000	01000000	93482225	00000000	66110000	654191C5
(4120)	65418CA4	C9416C3B	9D4452BE	553D552D	A83CAB3A	A53C0015	003D0010	01BB5555	E9BBAB0A	03000000
(4160)	60000000	3C000000	00453300	3643B899	C1C31257	E8481867	2F49CCB5	0F4930FF	7F499C2B	8D48983E

(26680)	474F2225	00000000	66110000	75419571	7541D334	4FC05823	924484F1	A13D62B8	903D7ADE	043D0FF1
(26720)	F93CDBB6	433C2587	3A3C0078	07000000	E0000000	3C000000	E0245500	30433458	D1C35485	E44838DF
(26760)	31494C2D	0F4918A7	7F495C31	9848086C	5649D0FC	72C29CB5	01C42A54	82C90ACA	93491839	0EC8193F
(26800)	80400000	00000000	00000000	00000000	5A40A466	05C0298E	00000000	0540298E	5A40A566	714069B4
(26840)	9ABF16C6	06BFA43A	A83FE4B2	5D40E7C0	C03F6451	00000000	CBBF3AB1	6A406ADE	206D6172	01000000
(26880)	86448842	894328DC	9EC0C3B9	EDC27E8A	92442FF2	94443AE4	C640F893	60C16224	A9BE45CF	C640F893
(26920)	3CC12274	F2C0A7EC	60000000	3D000000	9B215500	00000000	9F020000	01000000	504F2225	00000000
(26960)	66110000	75410411	744174C2	1041AEC1	9344E2A8	153E1C2B	B13C5515	443D6C4F	B5BB398E	593DC755
(27000)	883B8E93	09000000	20010000	3C000000	E0245500	30433458	D1C35485	E44838DF	31494C2D	0F4918A7
(27040)	7F495C31	9848086C	5649D0FC	72C29CB5	01C42A54	82C90ACA	93491839	0EC8193F	80400000	00000000
(27080)	00000000	00000000	5A40A466	05C0298E	00000000	0540298E	5A40A566	714069B4	9ABF16C6	06BFA43A
(27120)	A83FE4B2	5D40E7C0	C03F6451	00000000	CBBF3AB1	6A406ADE	206D6172	01000000	86448842	894328DC
(27160)	EB40D163	D2C296E1	93444FA7	9544413D	D1409C25	5DC1EC27	FB3E5A58	D1409C25	40C1AFC5	D9C03A5A

HEX DUMP OF DD108778

(0)	60000000	5C000000	05B56700	00000000	A2020000	01000000	034C4225	00000000	66000000	51429CB8
(40)	4E42D525	C5C2B203	55445002	B040A3E3	AB403E30	6E41555B	46C0B2D9	B1C01F60	D2BFC247	0C000000
(80)	80010000	5B000000	60746700	31C380EF	9C432486	C9C8E84D	10C94C28	A1C8C8DF	4149C08D	A4C88879
(120)	0FC96C6B	87C1940F	0AC4BE49	9EC92EE1	5A4910CA	B7C7A4B4	80400000	00000000	00000000	00000000
(160)	5B40E2C2	03C00F4E	00000000	03400F4E	5B40E2C2	7A40EEBD	3D3F846E	A43E5849	4EBF9479	6640740B
(200)	C73F3282	00000000	CBBF3AB1	6A406ADE	20617072	01000000	8444384A	8743C275	C9C22430	18C3F87C
(240)	544427F3	4344A914	1CC23597	CAC118FE	AFC12B36	1CC23597	28C182C7	FEC1A586	60000000	5C000000
(280)	F3E16700	00000000	A2020000	01000000	0C4C4225	00000000	66000000	5142154F	504239DD	99C2067C
(320)	564429C4	6840AB74	453FAB96	A03F5556	C5BF0048	DD3EABAA	0FBF0050	03000000	60000000	5B000000
(360)	60746700	31C380EF	9C432486	C9C8E84D	10C94C28	A1C8C8DF	4149C08D	A4C88879	0FC96C6B	87C1940F
(400)	0AC4BE49	9EC92EE1	5A4910CA	B7C7A4B4	80400000	00000000	00000000	00000000	5B40E2C2	03C00F4E
(440)	00000000	03400F4E	5B40E2C2	7A40EEBD	3D3F846E	A43E5849	4EBF9479	6640740B	C73F3282	00000000
(480)	CBBF3AB1	6A406ADE	20617072	01000000	8444384A	8743C275	9DC2DDAF	09C3247F	564402BA	48444460
(520)	21C25D9A	E0C13B05	8CC18CE3	21C25D9A	70C13A17	EBC1E6D8	60000000	5C000000	D92C6800	00000000
(560)	A2020000	01000000	1B4C4225	00000000	66000000	4F427EFB	4D42E6F6	C2C2F77E	54440AEC	4040DBD6
(600)	C4403154	DA40DBA4	40C08621	B4BFF45C	89BF7A46	07000000	E0000000	5B000000	60746700	31C380EF
(640)	9C432486	C9C8E84D	10C94C28	A1C8C8DF	4149C08D	A4C88879	0FC96C6B	87C1940F	0AC4BE49	9EC92EE1
(680)	5A4910CA	B7C7A4B4	80400000	00000000	00000000	00000000	5B40E2C2	03C00F4E	00000000	03400F4E
(720)	5B40E2C2	7A40EEBD	3D3F846E	A43E5849	4EBF9479	6640740B	C73F3282	00000000	CBBF3AB1	6A406ADE
(760)	20617072	01000000	8444384A	8743C275	C6C203AB	17C3E642	5444FFDC	43443337	1DC29901	CAC1BEDB
(800)	ADC1CB00	1DC29901	2AC181D0	FCC1AE8F	60000000	5C000000	CA5E6800	02000000	A2020000	01000000
(840)	254C4225	00000000	66110000	5542A4B3	53428079	58C21943	5D447828	AA406E51	AB40B709	D840C04C
(880)	96C0DB84	77BF0068	58BEB75D	08000000	00010000	5B000000	C05E6800	31C3D0BD	9C435220	C9C80034
(920)	10C9F837	A1C830CF	4149388F	A4C830CE	0FC9345E	88C17423	0AC42389	9EC9D8E0	5A4908CB	B7C7A4B4
(960)	80400000	00000000	00000000	00000000	5B4067D9	03C05828	00000000	03405828	5B4067D9	7A40C5BD
(1000)	3D3F5471	A43EC84B	4EBFA47C	66404F0B	C73F1282	00000000	CBBF3AB1	6A406ADE	20617072	01000000
(1040)	8444384A	8743C275	60C21ACF	01C35183	5D440B25	5244001E	1AC28C7C	06C2C6FA	4DC19A5D	1AC28C7C
(1080)	B3C1B03A	E2C1EF7D	60000000	5C000000	B2A46800	00000000	A2020000	01000000	334C4225	00000000
(1120)	66110000	5342F296	5142C5D7	9BC28EFE	5944AF6D	0F40ABAE	B24039B8	AA40B995	3FC01C77	3F3FE420
(1160)	59C055DF	09000000	20010000	5B000000	C05E6800	31C3D0BD	9C435220	C9C80034	10C9F837	A1C830CF
(1200)	4149388F	A4C830CE	0FC9345E	88C17423	0AC42389	9EC9D8E0	5A4908CB	B7C7A4B4	80400000	00000000
(1240)	00000000	00000000	5B4067D9	03C05828	00000000	03405828	5B4067D9	7A40C5BD	3D3F5471	A43EC84B
(1280)	4EBFA47C	66404F0B	C73F1282	00000000	CBBF3AB1	6A406ADE	20617072	01000000	8444384A	8743C275

(1320)	A0C29B3B	0FC3B8A0	59449E65	4A440FDA	1CC251A0	EFC12079	8FC1C5BD	1CC251A0	84C13903	F6C12222
(1360)	60000000	5C000000	9DE06800	00000000	A2020000	01000000	3F4C4225	00000000	66110000	4F421B1F
(1400)	4C42EAEC	BBC2F57E	5544E56B	5540C2F7	C440F894	D94065F5	C3BFD964	EABFF820	58C04657	0C000000
(1440)	80010000	5B000000	C05E6800	31C3D0BD	9C435220	C9C80034	10C9F837	A1C830CF	4149388F	A4C830CE
(1480)	0FC9345E	88C17423	0AC42389	9EC9D8E0	5A4908CB	B7C7A4B4	80400000	00000000	00000000	00000000
(1520)	5B4067D9	03C05828	00000000	03405828	5B4067D9	7A40C5BD	3D3F5471	A43EC84B	4EBFA47C	66404F0B
(1560)	C73F1282	00000000	CBBF3AB1	6A406ADE	20617072	01000000	8444384A	8743C275	BFC23CAD	15C37746
(1600)	5544F55D	4444EC53	1CC22C66	CDC189FE	A6C1F16F	1CC22C66	37C15844	F8C1D278	60000000	5C000000
(1640)	881C6900	00000000	A2020000	01000000	4B4C4225	00000000	66000000	5A426335	5842D374	8DC28556
(1680)	5844D6CC	CC3F415E	A33FB156	29416271	AD3E4617	7EC09A89	B4BF38FC	0B000000	60010000	5B000000
(1720)	C05E6800	31C3D0BD	9C435220	C9C80034	10C9F837	A1C830CF	4149388F	A4C830CE	0FC9345E	88C17423
(1760)	0AC42389	9EC9D8E0	5A4908CB	B7C7A4B4	80400000	00000000	00000000	00000000	5B4067D9	03C05828
(1800)	00000000	03405828	5B4067D9	7A40C5BD	3D3F5471	A43EC84B	4EBFA47C	66404F0B	C73F1282	00000000
(1840)	CBBF3AB1	6A406ADE	20617072	01000000	8444384A	8743C275	91C29D91	08C33617	58440EC5	4B443E57
(1880)	24C296B8	F6C1DD2E	87C18F2F	24C296B8	8EC18428	F2C14439	60000000	5C000000	72586900	02000000
(1920)	A2020000	01000000	574C4225	00000000	66000000	5542EB90	53425ADE	9FC23CA4	57444F23	344018C6
(1960)	5E402531	E34049E0	18C0E891	13C055E5	A5BE8621	07000000	E0000000	5B000000	C05E6800	31C3D0BD
(2000)	9C435220	C9C80034	10C9F837	A1C830CF	4149388F	A4C830CE	0FC9345E	88C17423	0AC42389	9EC9D8E0
(2040)	5A4908CB	B7C7A4B4	80400000	00000000	00000000	00000000	5B4067D9	03C05828	00000000	03405828
(2080)	5B4067D9	7A40C5BD	3D3F5471	A43EC84B	4EBFA47C	66404F0B	C73F1282	00000000	CBBF3AB1	6A406ADE
(2120)	20617072	01000000	8444384A	8743C275	A3C281D9	0CC3E2CD	57440D19	48442149	22C21863	E4C1AF3C
(2160)	94C10244	22C21863	70C12517	F4C11D43	60000000	5C000000	618A6900	00000000	A2020000	01000000
(2200)	614C4225	00000000	66000000	57429F2F	5542836E	C5C2CFC5	58445FF8	C23FC370	B440E805	DD40C314
(2240)	FABF55F5	69BF1826	22C0E845	07000000	E0000000	5B000000	20496900	31C3288C	9B4394BA	C9C8181A
(2280)	10C9A447	A1C890BE	4149B490	A5C80023	0FC9E050	89C1FA35	0AC48BC8	9EC982E0	5A4900CC	B7C7A4B4
(2320)	80400000	00000000	00000000	00000000	5B40FBEF	03C07702	00000000	03407702	5B40FBEF	7A409DBD
(2360)	3D3F2474	A43E384E	4EBFB47F	66402A0B	C73FF281	00000000	CBBF3AB1	6A406ADE	20617072	01000000
(2400)	8444384A	8743C275	CAC26F01	20C31889	58447CED	46449EF8	1AC24F50	E7C111F5	B6C16017	1AC24F50
(2440)	54C1C030	09C2AA92	60000000	5C000000	4CC66900	00000000	A2020000	01000000	6D4C4225	00000000
(2480)	66000000	5142A5B2	50428D55	94C29149	554406FB	E03F491A	C740498D	31406EE5	C8BFB755	77BF2501
(2520)	A4BF9228	08000000	00010000	5B000000	20496900	31C3288C	9B4394BA	C9C8181A	10C9A447	A1C890BE
(2560)	4149B490	A5C80023	0FC9E050	89C1FA35	0AC48BC8	9EC982E0	5A4900CC	B7C7A4B4	80400000	00000000
(2600)	00000000	00000000	5B40FBEF	03C07702	00000000	03407702	5B40FBEF	7A409DBD	3D3F2474	A43E384E
(2640)	4EBFB47F	66402A0B	C73FF281	00000000	CBBF3AB1	6A406ADE	20617072	01000000	8444384A	8743C275
(2680)	98C2417A	05C3E2A2	554499F0	48441E0E	23C2255D	DBC1C1E1	88C17910	23C2255D	6EC1038D	E5C1486C
(2720)	60000000	5C000000	330C6A00	00000000	A2020000	01000000	7B4C4225	00000000	66110000	52422133
(2760)	504261E9	BCC2FAAD	56445E9E	9140498A	673F49EA	99402530	87BF9254	80C00069	D03EDB06	08000000
(2800)	00010000	5B000000	20496900	31C3288C	9B4394BA	C9C8181A	10C9A447	A1C890BE	4149B490	A5C80023
(2840)	0FC9E050	89C1FA35	0AC48BC8	9EC982E0	5A4900CC	B7C7A4B4	80400000	00000000	00000000	00000000
(2880)	5B40FBEF	03C07702	00000000	03407702	5B40FBEF	7A409DBD	3D3F2474	A43E384E	4EBFB47F	66402A0B
(2920)	C73FF281	00000000	CBBF3AB1	6A406ADE	20617072	01000000	8444384A	8743C275	C0C238E1	18C3E117
(2960)	56449491	4544A86C	1DC23C05	D8C19163	AAC126AD	1DC23C05	45C18E1F	00C294AF	60000000	5C000000
(3000)	1F486A00	00000000	A2020000	01000000	874C4225	00000000	66110000	4E423810	4D427D6A	B0C2FBE1
(3040)	57446CFA	8C3F2F5A	893FBAC8	3940A337	AF3BE183	DABEE9A2	BABFA3BB	0C000000	80010000	5B000000
(3080)	20496900	31C3288C	9B4394BA	C9C8181A	10C9A447	A1C890BE	4149B490	A5C80023	0FC9E050	89C1FA35
(3120)	0AC48BC8	9EC982E0	5A4900CC	B7C7A4B4	80400000	00000000	00000000	00000000	5B40FBEF	03C07702
(3160)	00000000	03407702	5B40FBEF	7A409DBD	3D3F2474	A43E384E	4EBFB47F	66402A0B	C73FF281	00000000
(3200)	CBBF3AB1	6A406ADE	20617072	01000000	8444384A	8743C275	B5C24D1A	15C38BBF	5744CFEF	47448EC1
(3240)	19C21F81	DEC19E89	9EC19B21	19C21F81	5CC13E87	F9C18DBD	60000000	5C000000	0A846A00	00000000
(3280)	A2020000	01000000	934C4225	00000000	66000000	4C42F809	4A420B38	ABC2B51B	57441910	1240F800
(3320)	C84055DD	974027B9	03C01F5C	92BE36D9	36C0B239	0C000000	80010000	5B000000	20496900	31C3288C
(3360)	9B4394BA	C9C8181A	10C9A447	A1C890BE	4149B490	A5C80023	0FC9E050	89C1FA35	0AC48BC8	9EC982E0
(3400)	5A4900CC	B7C7A4B4	80400000	00000000	00000000	00000000	5B40FBEF	03C07702	00000000	03407702
(3440)	5B40FBEF	7A409DBD	3D3F2474	A43E384E	4EBFB47F	66402A0B	C73FF281	00000000	CBBF3AB1	6A406ADE
(3480)	20617072	01000000	8444384A	8743C275	AFC2AF50	11C35282	5744FF04	47445A52	19C25DA4	D7C19551
(3520)	96C1D6F1	19C25DA4	57C1DD7A	EFC134DF						