ISEE - 3

512 S RATES: H, HE, AND Z72

78-079A-03C

ISEE 3

512 S RATES H, HE, AND Z>2, TAPE

78-079A-03C

This data set has been restored. There were originally two 9-track, 1600 BPI tapes written in Binary. There is one restored tape. The DR tape is a 3480 cartridge and the DS tape is 9-track, 6250 BPI. The original tapes were created on an IBM 360 computer and the restored tapes were created on an IBM 9021 computer. The DR and DS numbers along with the corresponding D numbers are as follows:

DR#	DS#	D#	FILES	TIME SPAN
DR005079	DS005079	D057388	1 - 49	08/18/78 - 12/31/79
		D059317	50 - 120	01/01/80 - 12/31/81

REQ. AGENT	REQ. NO.	ACQ. AGENT
DEW	V0186	HKH

ISEE-3

512 S RATES: H,HE, AND Z72

78-079A-03C

THIS DATA SET CATALOG CONSISTS OF 2 TAPE. THE TAPE IS 1600 BPI, BINARY, 9 TRACK, AND MULTIFILED. THE TAPE WAS CREATED ON AN IBM 360 COMPUTER. THE D AND C NUMBERS WITH THE TIME SPAN ARE AS FOLLOWS:

D#	C#	FILES	TIME SPAN
D-57388	C-23105	49	08/18/78-12/31/79
D-59317	C-23334	71	01/01/80-12/31/81

10-077-030

THE NUCLEAR AND IONIC CHARGE DISTRIBUTION PARTICLE EXPERIMENTS ON THE ISEE-1 AND ISEE-3 SPACECRAFT: DESCRIPTION OF THE NSSDC DATA TAPE

prepared by

B. Klecker

Max-Planck-Institut für Physik und Astrophysik

Institut für extraterrestrische Physik

February 1983

TABLE OF CONTENTS

SUMMARY CHART

1. Introduction 1

2. Tape Format 2

3. Data Description 2

3.1 Rate Data 2

3.1.1 Energy Response and Flux Conversion Factors 2

3.1.2 Sector Averages 3

3.2 Supplementary Data 4

References 5

Figure Captions 5

Addresses 5

S U M M A R Y C H A R T

HOM/HOH EXPERIMENT: DATA TAPE FOR NSSDC

EXPERIMENT:	HOM	ISEE-1
	HOH	ISEE-3
Physical Form of Data:	Digital Magnetic Tape 9 track, 1600 bpi LRECL = 400; BLKSIZE = 6400 (Fixed blocked)	
Type of Data:	Reduced Data	
Data Set:		
Rates (omnidirectional)		
Protons	0.03 - 20 MeV	11 energy channels
Helium	0.015 - 20 MeV/Nuc	7 energy channels
Heavy Ions (Z>2)	0.13 - 43 MeV/Nuc	3 energy channels
Temporal Resolution:	64 sec	(ISEE-1, HIGH bit rate)
	256 sec	(ISEE-1, Low bit rate)
	512 sec	(ISEE-3, NOMINAL bit rate)
Principal Investigator:	Dr. D. Hovestadt Max-Planck-Institut für Physik und Astrophysik, Institut für extra-terrestrische Physik, 8046 Garching, FRG	

1. Introduction

The ISEE-1 and ISEE-3 experiments are identical and have been designed to measure the elemental abundances, charge state composition, energy spectra, and angular distributions of energetic ions in the energy range ~ 3 keV/charge to 80 MeV/nucleon and of electrons between 75 and 1300 keV.

The instrument consists of three different sensor systems: ULECA is an electrostatic deflection analyzer system, its energy range is ~ 3 to 560 keV/charge; the ULEWAT is a double dE/dX versus E thin-window flow-through proportional counter/solid-state detector telescope covering the energy range from 0.2 to 80 MeV/nucleon (Fe); the ULEZEQ sensor consists of a combination of an electrostatic deflection analyzer and a thin-window dE/dX versus E system with a proportional counter and a position-sensitive solid-state detector. The energy range is 0.3 to 3 MeV/nucleon for He. A cross sectional view of the ULECA and ULEWAT sensor is given in Fig. 1 and Fig. 2, respectively. While the ULECA and the ULEWAT sensors are designed mainly for interplanetary and outer magnetospheric studies, the ULEZEQ sensor will also obtain composition data in the trapped radiation zone. For a detailed description of the experiment and of the scientific objectives see Hovestadt et al. (1978).

The data tape provided to the World Data Center will contain a selection of rate data obtained from the electrostatic deflection analyzer (ULECA) and from the wide angle proportional counter/solid state detector telescope (ULEWAT). The data are restricted to quantities which do not need very detailed knowledge of the instruments. The rate data will be supplemented by information on the s/c-position, the bit rate and by housekeeping values relevant for the interpretation of the data. The temporal resolution will be 64 - 512 seconds, dependent on the bit rate. Data obtained in the magnetosphere will not be included on the data tape.

These more detailed data, as well as pulse height data and high time resolution rate data, are available but require substantial involvement of the experimenters and may be obtained directly through the principal investigator.

2. Tape Format

The tapes will be multi-filed, 9 track, 1600 bpi. The records will be fixed blocked with a logical record length of 400 bytes and a physical record length of 6400 bytes. A physical record holds 64 - 512 seconds of information dependent on the bit rate as given below:

s/c	Bit Rate	Temporal Resolution (1 Logical Record)
ISEE-1	HIGH (16384 bps)	64 s
	LOW (4096 bps)	256 s
ISEE-3	NOMINAL (2048 bps)	512 s

There will be separate files for different bit rates.

A detailed description of the data records is given in Table 1. "Word" and "Halfword" refer to IBM 360 32-bit words and 16-bit halfwords, respectively. Format I * 4 refers to a 4 byte integer, I * 2 refers to a 2-byte integer and R * 4 refers to a 4-byte floating point number (IBM 360 format).

3. Data Description

3.1 Rate Data

3.1.1 Energy Response and Flux Conversion Factors

The data tape provides information on proton, helium, and heavy ion (Z>2) rates over a wide energy range (e.g. 30 keV to 20 MeV

for protons). The number of COUNTS for any particular rate is accumulated over the time period given in each logical record and over all directions during the spacecraft spin. However, for some of the rates specific sectors which are affected by sunlight have been excluded (see 3.1.2).

Detailed informations on the energy ranges of all rates are given in Table 2 and Table 3. The rate ID refers to the corresponding ID used in the record format description (Table 1). The rate information may be converted to differential fluxes with

$$FLUX = COUNTS/TIME * CONV$$

The flux conversion factors ("CONV") and the corresponding flux units are given in Table 2 and Table 3 for ISEE-1 and ISEE-3, respectively. Both the energy ranges and the flux conversion factors may be subject to changes during the lifetime of the experiment (due to gain shifts, etc.) and will be updated if necessary.

NOTE: COUNTS*and TIME as given on the tape are coded in the following way:

COUNTS $\geq$ 0, TIME > 0:	data are o.k.
COUNTS = 0, TIME = 0:	data gap
COUNTS < 0, TIME > 0:	rate may be affected by dead time, background, etc. This rate cannot be used without corrections.

* COUNTS do include background counts!

3.1.2 Sector Averages

Sunlight affects some rates in one or two out of eight sectors. These sectors are not included in the spinaveraged rate given on the tape. Words 81 - 84 (1 byte per rate) provide the information which sectors have been used for the averaging

process. This information is coded as given in the following examples:

SECTOR	7 MSB	6	5	4	3	2	1	0 LSB	
BYTE	1	1	1	1	1	1	1	1	all sectors used
	1	1	0	1	1	1	1	1	all but sector 5 are used
	0	0	0	0	0	0	0	0	no sector information available

Only those omnidirectional rates (where no sector information is available) which are not affected by sun light are included on the tape.

The orientation of the sectoring scheme with respect to the sun direction is given in Figure 3. However, this orientation is different for different sensors ("S1" and "S2" in Figure 3). Therefore the rates given in Table 2 are labelled "S1" or "S2" to indicate the orientation of the corresponding sectoring scheme.

3.2 Supplementary Data

Each Logical Record contains the START/STOP time, spacecraft position, bit rate, spin period and some housekeeping (HK) parameters relevant for the interpretation of the data. Table 4 and Table 5 give the nominal values and the margin for these HK-parameters. If the actual readout of these parameters is outside the specified margin, the rates as given in Tables 4 and 5 cannot be used.

In addition, each logical Record contains 10 MONITOR rates. These are single counting rates of individual detectors relevant for the coincidence-rates as given in Tables 2 and 3; for details see Table 6 and Hovestadt et al. (1978).

References

D. Hovestadt, G. Gloeckler, C.Y. Fan, L.A. Fisk, F.M. Ipavich, B. Klecker, J.J. O'Gallagher, M. Scholer, J. Cain, H. Höfner, E. Künneth, P. Laeverenz, and E. Tums: "The Nuclear and Ionic Charge Distribution Particle Experiments on the ISEE-1 and ISEE-C Spacecraft", IEEE Trans. Geoscience Electr., Vol GE-16, No. 3, July 1978

Figure Captions

Fig. 1 Side and top cross-sectional view of ULECA

Fig. 2 Side and top cross-sectional view of ULEWAT

Fig. 3a Azimuthal sector scheme of the ULECA rate data (labelled "S1" in Table 2/3) with respect to the sun

Fig. 3b Azimuthal sector scheme of the ULEWAT rate data (labelled "S2" in Table 2/3) with respect to the sun

```
*****************************************************************************
TABLE 1:          ISEE1/3  HOM/HOH EXPERIMENT   NSSDC TAPE FORMAT
                  DATE : NOV  1 1982            REVISED :
*****************************************************************************

WORD HALF  FORMAT                 ITEM
     WORD

  1   1     I*2     TAPE NR
      2      "      EXPERIMENT ID (ISEE1: 27, ISEE3: 7)
  2          "      SPACE CRAFT CLOCK
  3   1     I*2     DAY OF YEAR (JAN 1=1)    START TIME OF RECORD
      2      "      YEAR                          "
  4   1      "      DAY OF MONTH                  "
      2      "      MONTH                         "
  5         I*4     MILLISEC. OF DAY             STOP TIME OF RECORD
  6   1     I*2     DAY OF YEAR                   "
      2      "      YEAR                          "
  7   1      "      DAY OF MONTH                  "
      2      "      MONTH                         "
  8         I*4     MILLISEC. OF DAY             SEE TABLES 4 AND 5
  9         R*4     DETECTOR BIAS                 "
 10          "      PC-BIAS UW                    "
 11          "      GAS PRESS. UW                 "
 12          "      +2.8 KV
 13   1     I*2     BIT RATE
      2      "      CALIBRATION-MODE INDICATOR
 14         R*4     GSE-X  (KM)              FOR START TIME OF RECORD
 15          "      GSE-Y   "
 16          "      GSE-Z   "
 17          "      SPIN PERIOD (MSEC.)
 18          "      AVERAGE FRAME RATE (AFR),(MICROSEC)
                    (NOMINAL REC. LENGTH = AFR*1024)
 19          "      M11 RATE   COUNTS        COUNTS DO INCLUDE BACKGROUND
 20          "       "   "     TIME
 21          "      AS FOR 19-20 FOR FOLLOWING RATES IN GIVEN ORDER:-
 *                  M21,M31,LH1,LP,MP1,MP2,MP3,HP1,HP2,MPA-PROTON,
 *                  MA1,MA2,MA3,HA1,HA2,HA3,MPA-ALPHA,LH2,MH,HH,
 80                 D1,D2,P1,P2,POS,STROBE UW,AW,MB1,MB2,MB3
                    (SEE ALSO TABLE 2/3)
 81   1      "      2 * Z4 HEXADECIMAL VALUES PER I*2 WORD
 *    2      "      INDICATING SECT. OVER WHICH SECT. RATES ARE AVERAGED
 *
 85   2      "      TOTAL OF 20 VALUES FOR RATES M11 ... MH
 86         I*4     POS-INDICATOR (USED FOR TAPE PRODUCTION)
 87         R*4     GAIN FACTOR  P1 (USED FOR TAPE PRODUCTION)
 88         R*4     GAIN FACTOR  P2 (USED FOR TAPE PRODUCTION)
 89   1     I*2     MODE  INDICATOR
 89   2             SPARE
 90         A*4     TAPE ID : 'ISEE' FOR THIS TAPE
 91                 SPARE
  *                   "
100                 SPARE
```

T2

TABLE 2 ENERGY RESPONSE AND FLUX CONVERSION FACTORS (ISEE-1)

RATE ID	SECTOR # SCHEME	PARTICLE	ENERGY RANGE (MEV/NUC)	CONVERS. FACTOR (CM**2 SR MEV/NUC)**-1
M11	S1	PROTON	0.030-0.036	37.7 * 10**3
M21	S1	PROTON	0.058-0.075	11.7 * 10**3
M31	S1	PROTON	0.112-0.157	5.2 * 10**3
LH1	S2	Z > 1	0.212-0.280 (P)	2.88
LP	S2	PROTON	0.33 -0.48	24.5
MPAP	S2	Z > 1	>0.486 (P)	-
MP1	S2	PROTON	0.486-0.664	22.1
MP2	S2	PROTON	0.664-1.14	8.2
MP3	S2	PROTON	1.14 -2.1	4.1
HP1	-	PROTON	5 - 10	0.24
HP2	-	PROTON	10 - 20	0.12
MPAA	S2	HELIUM	> 0.34	-
MA1	S2	HELIUM	0.34 -0.406	59.6
MA2	S2	HELIUM	0.406-0.51	37.1
MA3	S2	HELIUM	0.51 -0.705	20.2
HA1	-	HELIUM	5.3 -7.5	1.47
HA2	-	HELIUM	7.5 -11.0	1.05
HA3	-	HELIUM	11.0 -20.0	0.41
LH2	S2	Z > 2	> 0.13 (O16)	-
MH	S2	Z > 2	0.3 -12.1 (O16)	0.33
HH	-	Z > 2	12.1 -42.7 (O16)	0.129

(#) SEE 3.2.2 AND FIGURE 3

THIS TABLE IS VALID FOR THE FOLLOWING TIME PERIODS :

977 DAY 200 - 365
1978 DAY 1 - 60

T3

TABLE 3 ENERGY RESPONSE AND FLUX CONVERSION FACTORS (ISEE-3)

RATE ID	SECTOR # SCHEME	PARTICLE	ENERGY RANGE (MEV/NUC)	CONVERS. FACTOR (CM**2 SR MEV/NUC)**-1
M11	S1	PROTON	0.030-0.036	35.3 * 10**3
M21	S1	PROTON	0.058-0.075	11.0 * 10**3
M31	S1	PROTON	0.113-0.158	4.8 * 10**3
LH1	S2	Z > 1	0.212-0.280 (P)	2.88
LP	S2	PROTON	0.33 -0.48	30.3
MPAP	S2	Z > 1	>0.486 (P)	-
MP1	S2	PROTON	0.486-0.666	27.4
MP2	S2	PROTON	0.666-1.2	9.2
MP3	S2	PROTON	1.20 -2.1	5.5
HP1	-	PROTON	5 - 10	0.24
HP2	-	PROTON	10 - 20	0.12
MPAA	S2	HELIUM	> 0.34	-
MA1	S2	HELIUM	0.334-0.402	72.4
MA2	S2	HELIUM	0.402-0.507	46.9
MA3	S2	HELIUM	0.507-0.702	25.3
HA1	-	HELIUM	5.3 -7.5	2.07
HA2	-	HELIUM	7.5 -11.0	1.30
HA3	-	HELIUM	11.0 -20.0	0.51
LH2	S2	Z > 2	> 0.13 (O16)	-
MH	S2	Z > 2	0.3 -12.1 (O16)	0.41
HH	-	Z > 2	12.1 -42.7 (O16)	0.161

(#) SEE 3.2.2 AND FIGURE 3

THIS TABLE IS VALID FOR THE FOLLOWING TIME PERIODS :

1978 DAY 200 - 365
1979 DAY 1 - 100

TABLE 4 HOUSEKEEPING PARAMETERS (ISEE-1)

ITEM	HK-VALUE	MARGIN	RATE AFFECTED (ID)
DETECTOR BIAS	4.36	+-0.05	ALL RATES
PC - BIAS (UW)	4.2	+-0.2	ALL RATES EXCEPT
GAS PRESS (UW)	2.7	+-0.1	HP1,HP2,M11,M21,M31
HIGH VOLTAGE(2.8 KV)	0.94	+-0.1	M11,M21,M31

TABLE 5 HOUSEKEEPING PARAMETERS (ISEE-3)

ITEM	HK-VALUE	MARGIN	RATE AFFECTED (ID)
DETECTOR BIAS	4.0	+-0.15	ALL RATES
PC - BIAS (UW)	4.0	+-0.2	ALL RATES EXCEPT
GAS PRESS (UW)	4.2	+-0.1	HP1,HP2,M11,M21,M31
HIGH VOLTAGE(2.8 KV)	0.96	+-0.1	M11,M21,M31

Table 6: MONITOR RATES ISEE-1/3

ID	Detector*	THRESHOLD (keV)	COMMENT
D1	D1	200	ULEWAT DETECTORS
D2	D2	1000	
P1	P1	15	
P2	P2	15	
POS	Hodoscope	2	
STROBE UW			
AW	A	200	Anticoincidence ULEWAT
MB1	MB	45	Background Detector ULECA
MB2	MB	79	
MB3	MB	163	

* see Fig. 2

T6

ULECA

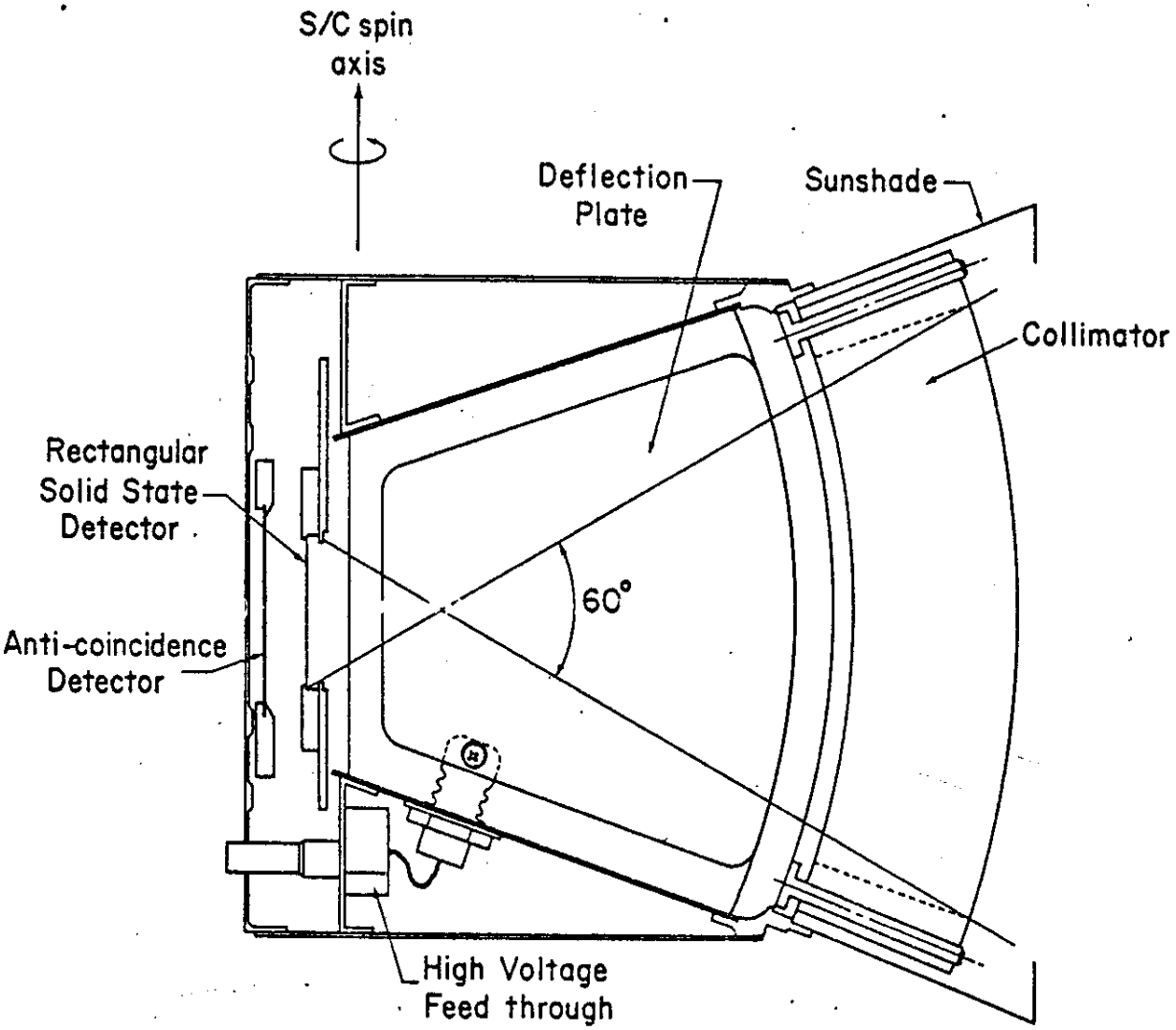

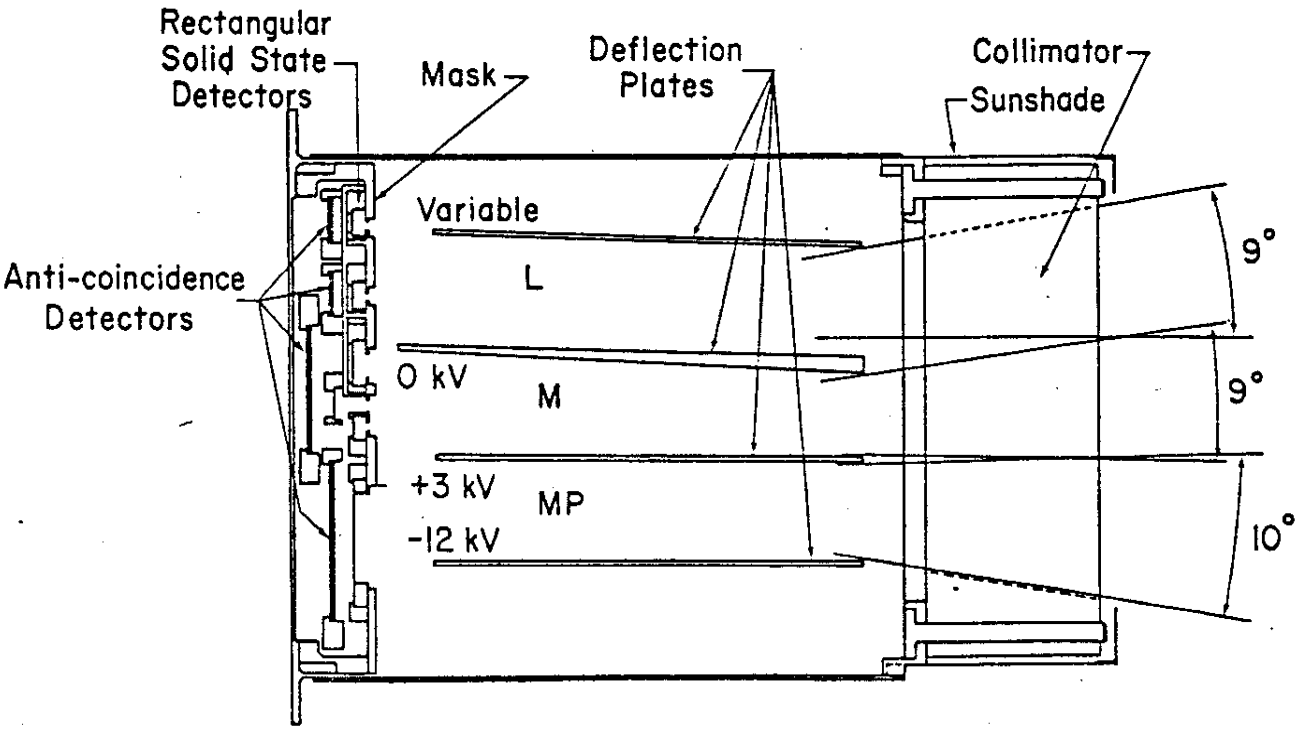

Figure 1

ULEWAT
(ISEE-1)

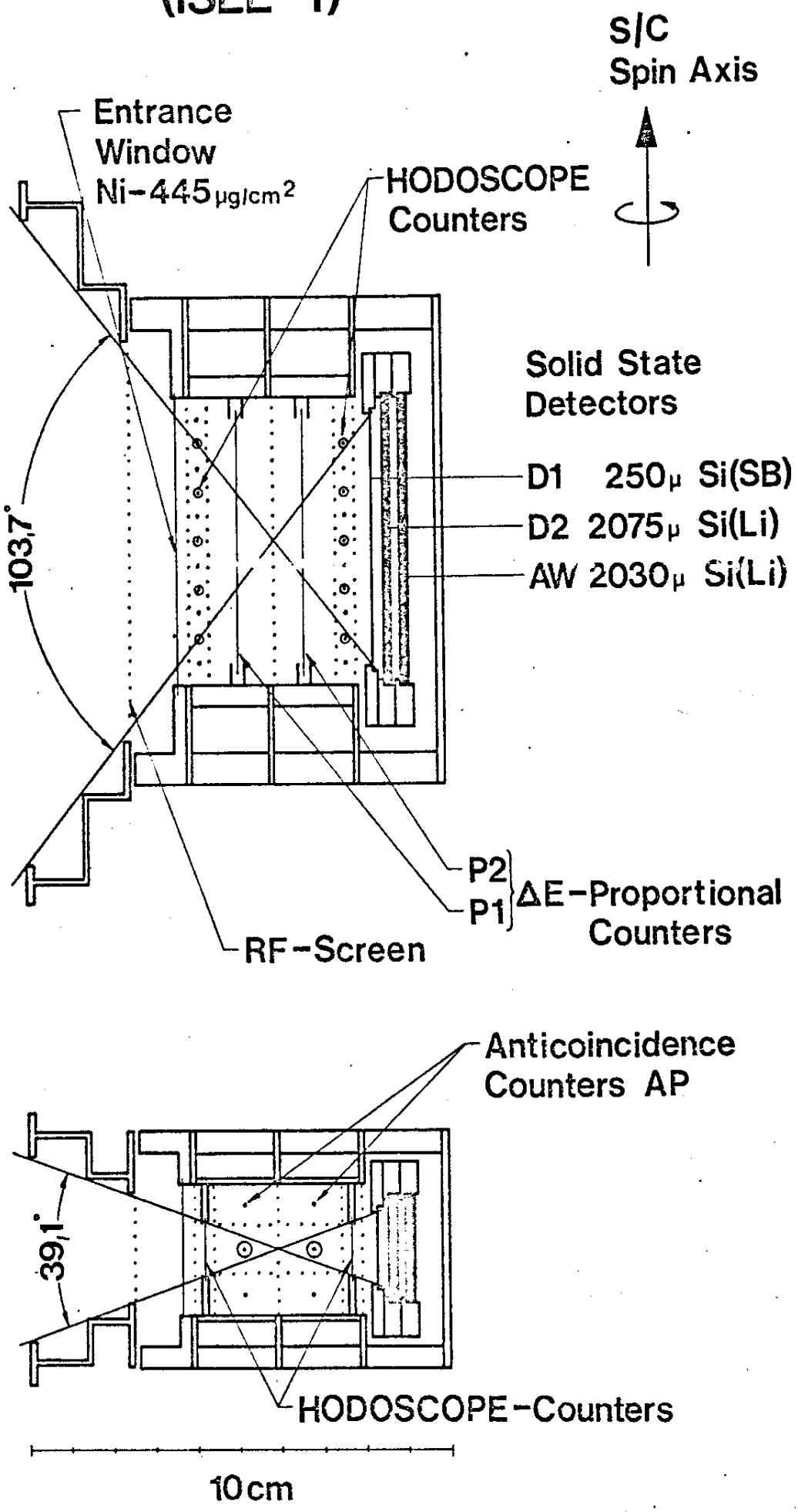

Figure 2

T8

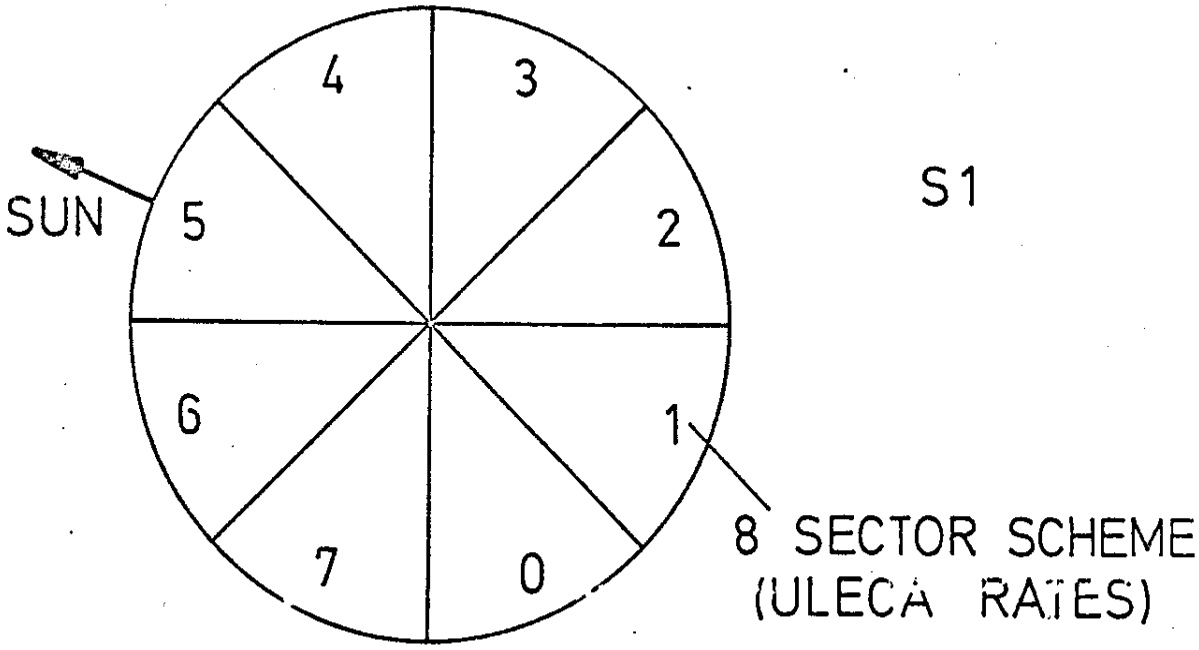
4
3
SUN
5
2
6
1
7
0
S1
8 SECTOR SCHEME
(ULECA RATES)

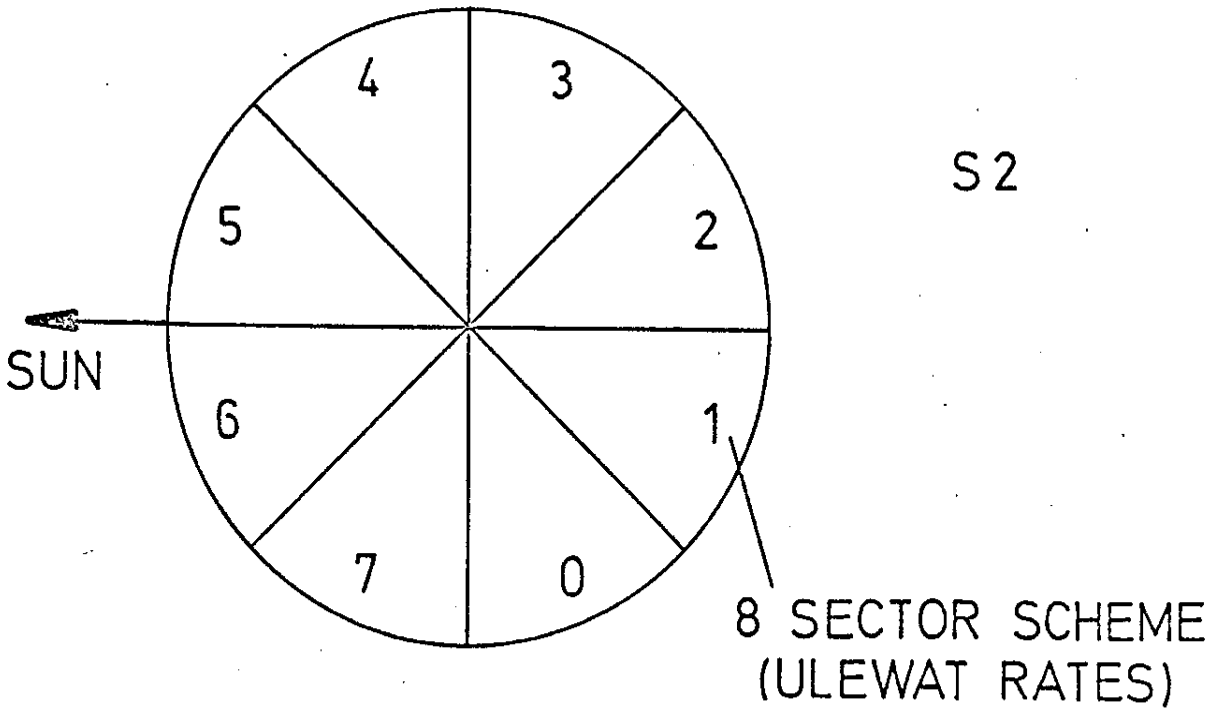
4
3
5
2
SUN
6
1
7
0
S2
8 SECTOR SCHEME
(ULEWAT RATES)

Figure 5

MAX-PLANCK-INSTITUT FÜR PHYSIK UND ASTROPHYSIK

INSTITUT FÜR EXTRATERRESTRISCHE PHYSIK
Dr. B. Klecker

8046 GARCHING b. MÜNCHEN
TELEFON MÜNCHEN (089) 3299
TELEGRAMM:
EXTERRAPLANCK GARCHING b. MÜNCHEN
FERNSCHREIBER: 05215845 xterr d

Dr. H. Kent Hills
National Space Science
Data Center
Goddard Space Flight
Center
Code 601

Greenbelt, Md 20771/USA

February 28, 1983

78-079A-03C

Dear Dr. Hills,

We shipped today the first data set of the 'Low energy ion' experiment on ISEE-3 (P.I.: Dr. D. Hovestadt) to the National Space Science Data Center. Enclosed please find the description of the data tapes and our schedule for submission of the next tapes.

Sincerely yours,

Berndt Klecker

Dr. Berndt Klecker

Enclosure

Plan for Data Submission to NSSDC

EXPERIMENT : HOH/ISEE-3

Principal Investigator: Dr. D. Hovestadt

TAPE NR.	TIME PERIOD	SHIPMENT
1	Aug 18, 1978 - Dec 31, 1979	Feb 28, 1983
2	Jan 1, 1980 - Dec 31, 1980	June 1, 1983
3	Jan 1, 1981 - Dec 31, 1981	Aug 1, 1983
4	Jan 1, 1982 - Dec 31, 1982	Oct 1, 1983

Tape No. 5 and the following tapes will be shipped ~ 2 months after getting the last data of the corresponding year.

MAX-PLANCK-INSTITUT FÜR PHYSIK UND ASTROPHYSIK

INSTITUT FÜR EXTRATERRESTRISCHE PHYSIK

8046 GARCHING b. MÜNCHEN
TELEFON MÜNCHEN (0 89) 32 99
TELEGRAMM:
EXTERRAPLANCK GARCHING b. MÜNCHEN
FERNSCHREIBER: 05 215845 xterr d

Garching, 02.03.1983

SHIPPING LETTER

TO: DR. H. KENT HILLS
NATIONAL SPACE SCIENCE DATA CENTER
GODDARD SPACE FLIGHT CENTER
CODE 601
GREENBELT, MD 20771
U.S.A.

FROM: DR. B. KLECKER
MAX-PLANCK-INSTIUT FÜR PHYSIK UND ASTROPHYSIK
INSTITUT FÜR EXTRATERRESTRISCHE PHYSIK
8046 GARCHING BEI MÜNCHEN
F.R.G.

CONTENTS: 1 COMPUTER TAPE
1 SET OF ACCOMPANYING SHIPPING LETTERS

NO COMMERCIAL VALUE /

FOR SCIENTIFIC PURPOSE ONLY

EXPERIMENT : HCF/ISEE-3
PI : DR. U. HOVESTADT
TAPE : DATA TAPE FOR NSSDC

TAPE	FILE	RECS	START TIME		STOP TIME	
1	2	1252	1978/AUG /18	0: 0:44.02	1978/AUG /27	0: 1:20.17
1	3	1442	1978/AUG /27	0: 1:20.17	1978/SEPT/ 6	16:26:34.49
1	4	163	1978/SEPT/ 6	23:17:59.44	1978/SEPT/ 8	0: 2: 7.53
1	5	1667	1978/SEPT/ 8	0:50:14.62	1978/SEPT/20	0: 2:54.19
1	6	767	1978/SEPT/20	0: 2:54.19	1978/SEPT/25	19:26: 4.81
1	7	854	1978/SEPT/25	21:21:13.69	1978/OCT / 2	0: 3:40.49
1	8	1667	1978/OCT / 2	0: 3:40.49	1978/OCT /13	23:55:54.56
1	9	1691	1978/OCT /14	0: 4:26.36	1978/OCT /26	0: 5:11.98
1	10	1214	1978/OCT /26	0: 5:11.98	1978/NOV / 2	19:27: 1.88
1	11	597	1978/NOV / 2	19:44: 5.44	1978/NOV / 7	0: 5:54.83
1	12	1717	1978/NOV / 7	0: 5:54.84	1978/NOV /19	0: 6:40.03
1	13	273	1978/NOV /19	0: 6:40.03	1978/NOV /20	16:28:27.31
1	14	1490	1978/NOV /20	21:10:15.31	1978/NOV /30	23:53:15.00
1	15	1711	1978/DEC / 1	5:14:26.78	1978/DEC /12	23:59:38.25
1	16	1698	1978/DEC /13	0: 8:10.01	1978/DEC /24	0: 0:23.95
1	17	588	1978/DEC /25	1:34:12.50	1978/JAN / 1	0: 2:14.42
1	18	1716	1979/JAN / 1	0:10:45.19	1979/JAN /13	0: 2:58.05
1	19	1471	1979/JAN /13	0:28:33.36	1979/JAN /25	0: 3:42.62
1	20	1655	1979/JAN /25	0:12:14.39	1979/FEB / 6	0: 4:27.17
1	21	1708	1979/FEB / 6	0:47: 6.02	1979/FEB /18	0: 5:11.73
1	22	1689	1979/FEB /18	1:56: 4.73	1979/MAR / 2	0: 5:56.27
1	23	1786	1979/MAR / 2	5:38:35.26	1979/MAR /13	23:32:33.75
1	24	1730	1979/MAR /14	6:47:34.02	1979/MAR /26	0: 7:25.55
1	25	1753	1979/MAR /26	0:15:57.52	1979/APR / 7	0: 8:10.32
1	26	1821	1979/APR / 7	1: 7:52.71	1979/APR /18	0: 0:23.40
1	27	1723	1979/APR /19	1:25:41.10	1979/MAY / 1	0: 1: 8.27
1	28	1782	1979/MAY / 1	0: 1: 8.26	1979/MAY /13	0: 1:53.14
1	29	1804	1979/MAY /13	0: 1:53.15	1979/MAY /25	0: 2:38.08
1	30	1887	1979/MAY /25	0: 2:38.08	1979/JUNE/ 6	0: 3:23.06
1	31	1903	1979/JUNE/ 6	0: 3:23.06	1979/JUNE/18	0: 4: 8.04
1	32	1705	1979/JUNE/18	0: 4: 8.04	1979/JUNE/30	0: 4:52.96
1	33	1805	1979/JUNE/30	0: 4:52.96	1979/JULY/12	0: 5:37.82
1	34	1650	1979/JULY/12	0: 5:37.82	1979/JULY/24	0: 6:22.60
1	35	1652	1979/JULY/24	0: 6:22.60	1979/AUG / 5	0: 7: 7.26

1	36	1623	1979/AUG / 5	0: 7: 7.26	1979/AUG /17	0: 7:51.85
1	37	1609	1979/AUG /17	0: 7:51.85	1979/AUG /28	0: 0: 4.50
1	38	1655	1979/AUG /29	0:25:39.81	1979/SEPT/10	0: 0:48.01
1	39	1718	1979/SEPT/10	0: 5:28.58	1979/SEPT/22	0: 1:53.04
1	40	1686	1979/SEPT/22	1:16:14.95	1979/OCT / 4	0: 2:17.16
1	41	1664	1979/OCT / 4	0:10:49.93	1979/OCT /16	0: 3: 1.17
1	42	1757	1979/OCT /16	0:45:49.92	1979/OCT /28	0: 3:45.10
1	43	980	1979/OCT /28	1: 3:27.46	1979/NOV / 4	0:48:14.83
1	44	684	1979/NOV / 4	1: 5:18.37	1979/NOV / 9	0: 4:28.95
1	45	1760	1979/NOV / 9	0:13: 0.72	1979/NOV /20	23:56:49.94
1	46	1558	1979/NOV /21	5:54:55.23	1979/DEC / 3	0: 5:56.41
1	47	1633	1979/DEC / 3	1: 5:33.79	1979/DEC /15	0: 6:40.04
1	48	1553	1979/DEC /15	1: 6:22.43	1979/DEC /27	0: 7:23.63
1	49	764	1979/DEC /27	1:41:13.09	1979/DEC /31	23:57:44.09

*REC : NR. OF RECORDS IN FILE

EXPERIMENT : HOW/ISEE-3 NSSDC-ID : 78-079A-03C

PI : DR. D. HOVESTADT
MAX-PLANCK-INSTITUT FUER EXTRATERR. PHYSIK
8046 GARCHING , FRG

TAPE : DATA TAPE FOR NSSDC TIME PERIOD : 1980+1981

TAPE	FILE	REC*	START TIME		STOP TIME		
2	2	1706	1980/JAN / 1	0:14:47.26	1980/JAN /13	0: 6:59.05	N
2	3	1358	1980/JAN /13	0:15:30.82	1980/JAN /23	23:40:38.38	N
2	4	90	1980/JAN /24	6: 4:27.96	1980/JAN /25	0: 7:42.62	N
2	5	1292	1980/JAN /25	0:16:14.39	1980/FEB / 6	0: 8:26.21	N
2	6	1260	1980/FEB / 6	0:16:57.98	1980/FEB /18	0: 0:38.05	N
2	7	1460	1980/FEB /18	0: 0:38.06	1980/MAR / 1	0: 1:21.74	N
2	8	1745	1980/MAR / 1	0: 1:21.74	1980/MAR /13	0: 2: 5.56	N
2	9	1613	1980/MAR /13	0: 2: 5.54	1980/MAR /25	0: 2:49.46	N
2	10	1551	1980/MAR /25	0: 2:49.46	1980/APR / 5	23:55: 1.69	N
2	11	1700	1980/APR / 6	0: 3:33.49	1980/APR /18	0: 4:17.66	N
2	12	1735	1980/APR /18	0: 4:17.66	1980/APR /27	0:26:10.25	N
2	13	431	1980/APR /27	0:43:13.79	1980/APR /30	0: 5: 1.89	N
2	14	1798	1980/APR /30	0: 5: 1.89	1980/MAY /12	0: 5:46.17	N
2	15	1515	1980/MAY /12	0: 5:46.17	1980/MAY /24	0: 6:30.48	N
2	16	1066	1980/MAY /24	0: 6:30.48	1980/JUNE/ 1	0: 1:18.87	N
2	17	818	1980/JUNE/ 1	1:26:36.57	1980/JUNE/ 8	0: 3:10.05	N
2	18	1391	1980/JUNE/ 8	0:20:13.59	1980/JUNE/20	0: 3:54.45	N
2	19	1285	1980/JUNE/20	0: 3:54.45	1980/JULY/ 2	0: 4:38.80	N
2	20	1392	1980/JULY/ 2	0: 4:38.80	1980/JULY/14	0: 5:23.14	N
2	21	1325	1980/JULY/14	1:13:37.29	1980/JULY/25	23:57:35.56	N
2	22	1478	1980/JULY/26	0: 6: 7.38	1980/AUG / 7	0: 6:51.51	N
2	23	1199	1980/AUG / 7	0: 6:51.51	1980/AUG /16	23:56: 5.81	N
2	24	1699	1980/AUG /17	0: 4:37.60	1980/AUG /31	0: 8:19.43	N
2	25	1533	1980/AUG /31	0: 8:19.43	1980/SEPT/11	0: 0:31.54	N
2	26	1507	1980/SEPT/12	0: 9: 3.29	1980/SEPT/24	0: 1:15.27	N
2	27	1805	1980/SEPT/24	0:26:50.58	1980/OCT / 6	0: 1:58.92	N
2	28	810	1980/OCT / 6	0:27:34.23	1980/OCT /12	0: 2:20.72	N
2	29	975	1980/OCT /12	0:36:27.80	1980/OCT /19	0: 4:11.42	N
2	30	1655	1980/OCT /19	0:55:22.03	1980/OCT /30	23:13:44.25	N
2	31	1614	1980/OCT /31	5:29: 2.09	1980/NOV /11	23:40: 2.94	N
2	32	1543	1980/NOV /12	7:46:13.76	1980/NOV /24	0: 6:21.56	N

5800	2	33	1456	1980/NOV /24	0: 6:21.56	1980/DEC / 6	0: 7: 4.78	N
5900								
00	2	34	1461	1980/DEC / 6	0: 7: 4.78	1980/DEC /18	0: 7:47.96	N
00	2	35	1628	1980/DEC /18	0: 7:47.96	1980/DEC /30	0: 8:31.11	N
6200	2	36	237	1980/DEC /30	0: 8:31.11	1980/JAN / 1	0: 2:57.12	N
6300								
6400								
6500	2	37	1519	1981/JAN / 1	0:11:28.89	1981/JAN /12	0: 2:11.38	N
6600	2	38	1514	1981/JAN /12	0: 2:11.38	1981/JAN /23	23:45:51.00	N
6700								
6800	2	39	1402	1981/JAN /24	0:37: 1.65	1981/FEB / 5	0: 3:37.81	N
6900	2	40	1435	1981/FEB / 5	6: 1:52.08	1981/FEB /16	23:30:14.00	N
7000								
7100	2	41	1423	1981/FEB /17	7:27:53.07	1981/MAR / 1	0:56:15.10	N
7200	2	42	1465	1981/MAR / 1	1:13:18.63	1981/MAR /13	0: 5:47.95	N
7300								
7400	2	43	1642	1981/MAR /13	0: 5:47.95	1981/MAR /24	22: 7: 6.75	N
7500	2	44	1217	1981/MAR /25	6:21:49.34	1981/APR / 5	1:14: 0.38	N
7600								
7700	2	45	1608	1981/APR / 5	1:22:32.15	1981/APR /19	0: 0:56.02	N
7800	2	46	946	1981/APR /19	0:35: 3.11	1981/APR /26	1:28: 4.54	N
7900								
8000	2	47	665	1981/APR /26	1:45: 8.08	1981/MAY / 1	0: 1:39.79	N
8100	2	48	1879	1981/MAY / 1	0: 1:39.80	1981/MAY /13	0: 2:23.62	N
8200								
8300	2	49	1443	1981/MAY /13	0: 2:23.62	1981/MAY /24	16:48: 7.28	N
8400	2	50	1232	1981/MAY /25	1:11:21.65	1981/JUNE/ 6	0: 3:51.44	N
8500								
00	2	51	1869	1981/JUNE/ 6	0: 3:51.44	1981/JUNE/18	0: 4:35.36	N
00	2	52	1853	1981/JUNE/18	0: 4:35.36	1981/JUNE/30	0: 5:19.17	N
8800								
8900	2	53	1839	1981/JUNE/30	0: 5:19.17	1981/JULY/12	1:48:23.25	N
9000	2	54	1708	1981/JULY/12	2: 5:26.79	1981/JULY/24	1:40:35.27	N
9100								
9200	2	55	1406	1981/JULY/24	1:49: 7.04	1981/AUG / 4	23:58:57.69	N
9300	2	56	725	1981/AUG / 5	0: 7:29.52	1981/AUG /11	15:33:18.24	N
9400								
9500	2	57	518	1981/AUG /11	15:37:34.13	1981/AUG /16	1: 6:26.58	N
9600	2	58	1178	1981/AUG /16	1:23:30.12	1981/AUG /26	20: 7: 9.25	N
9700	2	59	344	1981/AUG /27	0:23: 2.35	1981/AUG /30	0:10:25.56	N
9800								
9900	2	60	718	1981/AUG /30	0:18:57.33	1981/SEPT/ 5	0:27:50.84	N
10000	2	61	1225	1981/SEPT/ 5	1:53: 8.53	1981/SEPT/14	23:34:25.81	N
10100	2	62	1091	1981/SEPT/14	23:51:29.38	1981/SEPT/24	0: 4:49.59	N
10200								
10300	2	63	1281	1981/SEPT/24	0:13:21.36	1981/OCT / 3	23:54: 3.25	N
10400	2	64	1582	1981/OCT / 4	0:11: 6.86	1981/OCT /15	23:54:46.50	N
10500								
10600	2	65	1295	1981/OCT /16	0:11:50.07	1981/OCT /27	23:38:26.13	N
10700	2	66	1315	1981/OCT /28	5:36:40.43	1981/NOV / 9	0: 4:44.53	N
10800								
10900	2	67	1223	1981/NOV / 9	0:13:16.30	1981/NOV /21	0: 5:27.54	N
11000	2	68	1507	1981/NOV /21	0:13:59.31	1981/DEC / 3	0: 6:10.49	N
11100								
00	2	69	1364	1981/DEC / 3	0:31:45.79	1981/DEC /15	0: 0:40.37	N
00	2	70	1363	1981/DEC /15	0: 9:12.15	1981/DEC /27	0: 1:23.60	N
11400	2	71	563	1981/DEC /27	0: 9:55.38	1981/DEC /31	23:51:44.50	N

ISEE - 3

D - 59317 C - 23334

78 - Ø79A - Ø37

1/1/8Ø - 12/31/81

DUMP OF TAPE ISOUT

INPUT TAPE ISOUT ON TU1
DATA INPUT H9 NF 71 SR 1 1 1 SR 2 1 2 SR 71 LAST 2

FILE 1 RECORD 1 LENGTH 120BYTES

(0)	7B7B7BF0	C9E2C5C5	4BC8D6D4	40404040	40404040	40404040	40404040	40404040	40404040
(40)	4040D4C1	E760D7D3	C1D5C3D2	60C9D5E2	E34B40C6	4B40D7C8	E8E2C9D2	40E44B40	C1E2E3D9
(80)	E24B40C9	D5E2E34B	40C64B40	C5E7E3D9	C1E3C5D9	D9C5E2E3	D94B40D7	C8E8E2C9	D2404040

FILE	INPUT RECS.	DATA RECORDS INPUT	MAX. SIZE	READ ERROR SUMMARY PERM	ZERO B	SHORT	UNDEF.	INPUT RETRIES #RECS.	TOTAL#
1	1	1	120	0	0	0	0	0	0

****** EOF ON COMPLETION OF DUMP FOR REQUEST SR=1=1=1

FILE 2 RECORD 1 LENGTH 6400BYTES

(0)	0001001A	0038B800	000107BC	00010001	000D89DE	000107BC	00010001	000F7DA4	413FFFFF	413FFFFF
(40)	41433333	40F5C28F	08000000	4615A62C	459B074F	448EF342	43BD6804	457A03E0	00000000	00000000
(80)	00000000	00000000	00000000	00000000	00000000	00000000	00000000	00000000	00000000	42381072
(120)	00000000	424004F1	00000000	00000000	41300000	42400000	41400000	42200000	00000000	417F47F0
(160)	00000000	00000000	00000000	00000000	00000000	00000000	00000000	00000000	00000000	00000000
(200)	00000000	00000000	00000000	00000000	00000000	00000000	00000000	00000000	00000000	00000000
(240)	00000000	00000000	00000000	00000000	00000000	00000000	00000000	00000000	00000000	00000000
(280)	43628000	421B0000	00000000	00000000	00000000	00000000	00000000	00000000	42F50000	42100000
(320)	DFFFFFFF	FFFFFFFF	0000FFFF	FFFF0000	00FFFFFF	00000000	406E147B	409EB852	00000000	00000000
(360)	00000000	00000000	00000000	00000000	00000000	00000000	00000000	00000000	00000000	D3A3B000
(400)	0001001A	0038B900	000107BC	00010001	000F7DA4	000107BC	00010001	001558F6	413FFFFF	413FFFFF
(440)	41433333	40F5C28F	08000000	4615A637	459B06E8	448EF8EC	43BD6804	457A03E0	428B0000	4314F3EF
(480)	C43AC800	431801CB	C2730000	4317F5A9	C341C000	43100131	C21F0000	42FFB223	41200000	4287FE57
(520)	00000000	42806ADB	00000000	428009E2	421A0000	43180000	422A0000	43180000	41700000	427FA8E9
(560)	00000000	42B87B02	00000000	42BFAD84	00000000	42BFAD83	00000000	43180000	00000000	43180000
(600)	00000000	43180000	00000000	42C06F77	00000000	4317FBBB	00000000	43100131	00000000	43180000
(640)	429F0000	42100000	43100000	42100000	42770000	42100000	423A0000	42100000	00000000	00000000
(680)	44557000	43180000	433AE000	42200000	422E0000	43180000	42330000	43100000	42C30000	43180000
(720)	DFFFFFFF	FFFFFFFF	0000FFFF	FFFF0000	00FFFFFF	00000000	406E147B	409EB852	00000000	D3A3B000
(760)	00000000	00000000	00000000	00000000	00000000	00000000	00000000	00000000	00000000	00000000
(800)	0001001A	0038BC00	000107BC	00010001	001558F7	000107BC	00010001	001D280F	413FFFFF	413FFFFF
(840)	41433333	40F5C28F	08000000	4615A65A	459B0577	448F09EA	43BD6804	457A03E0	C2830000	431C0220
(880)	C43C1000	431FFC5C	C2A10000	43200000	C3855000	431FFC5C	C2430000	431FFC5C	41100000	42BF4CE1
(920)	00000000	42C06FCC	00000000	42C00ED3	42240000	43200000	423D0000	43200000	41200000	42C00ED3
(960)	00000000	42BFADDA	00000000	42BFADDA	00000000	42C06FCC	00000000	43200000	00000000	43200000
(1000)	00000000	43200000	41100000	42C00ED3	00000000	431FF64D	00000000	43200000	00000000	43200000
(1040)	42980000	42100000	4310E000	42100000	427B0000	42100000	42310000	42100000	42F50000	42100000
(1080)	44727000	43200000	433A0000	42200000	422D0000	43200000	42690000	43200000	43135000	43200000
(1120)	DFFFFFFF	FFFFFFFF	0000FFFF	FFFF0000	00FFFFFF	00000000	406E147B	409EB852	00000000	D3A3B000
(1160)	00000000	00000000	00000000	00000000	00000000	00000000	00000000	00000000	00000000	00000000
(1200)	0001001A	0038C000	000107BC	00010001	001D2810	000107BC	00010001	0024F72B	413FFFFF	413FFFFF
(1240)	41433333	40F5C28F	08000000	4615A688	459B03A4	448F2093	43BD6788	457A03E0	42A80000	431C021A
(1280)	C43F4000	431FF035	C29F0000	43200000	C38EC000	431FF645	C2480000	431FFC55	00000000	42BFADAC
(1320)	00000000	42BFADAC	00000000	42BFADAD	421D0000	43200000	42310000	43200000	00000000	42C00EA5
(1360)	00000000	42C06F9F	00000000	42C00EA5	00000000	42C00EA5	00000000	43200000	00000000	43200000
(1400)	00000000	43200000	00000000	42BF4CB3	00000000	43200000	00000000	431FF645	00000000	43200000
(1440)	42AC0000	42100000	42F40000	42100000	42780000	42100000	42260000	42100000	43124000	42100000
(1480)	4474D800	43200000	4337C000	42200000	42370000	43200000	42570000	43200000	43112000	43200000
(1520)	DFFFFFFF	FFFFFFFF	0000FFFF	FFFF0000	00FFFFFF	00000000	406E147B	409EB852	00000000	D3A3B000
(1560)	00000000	00000000	00000000	00000000	00000000	00000000	00000000	00000000	00000000	00000000
(1600)	0001001A	0038C400	000107BC	00010001	0024F728	000107BC	00010001	002CC641	413FFFFF	413FFFFF
(1640)	41433333	40F5C28F	08000000	4615A6B7	459B01BA	448F373E	43BD6788	457A03E0	C2C10000	431BFC0A
(1680)	C43EC800	43200000	C2AD0000	431FEA26	C3908000	43200000	C23C0000	43200000	41100000	42C00EA6
(1720)	00000000	42C00EA6	00000000	42BF4CB3	42210000	43200000	423A0000	43200000	41200000	42C00EA5
(1760)	00000000	42C00EA6	00000000	42C06F9F	00000000	42C00EA5	00000000	43200000	00000000	43200000
(1800)	00000000	43200000	41200000	42BFADAD	00000000	431FF645	00000000	431FF646	00000000	43200000
(1840)	42AC0000	42100000	42F60000	42100000	42710000	42100000	42300000	42100000	42F40000	42100000
(1880)	44745000	43200000	43398000	42200000	42670000	43200000	42760000	43200000	43118000	43200000

(4640)	43728000	42100000	42D30000	42100000	442AC000	42100000	4419C000	42100000	43DC0000	42100000
(4680)	4577F800	43200000	432CC000	42200000	42530000	43200000	424C0000	43200000	42E20000	43200000
(4720)	DFFFFFFF	FFFFFFFF	0000FFFF	FFFF0000	00FFFFFF	00000000	4047AE14	408F5C29	00000000	D3A3B000
(4760)	00000000	00000000	00000000	00000000	00000000	00000000	00000000	00000000	00000000	00000000
(4800)	0002001A	00384000	016D07BD	001F000C	04E053D4	016D07BD	001F000C	04E822E7	413FFFFF	4143D70A
(4840)	41433333	40F5C28F	08000000	4618039A	4568A92E	45172C1D	43BE4690	457A03E0	43221000	431B788A
(4880)	438F1000	431FF750	C32B1000	431FF750	00000000	00000000	00000000	00000000	41100000	42BFCC32
(4920)	C1200000	42BFCC32	00000000	00000000	42B10000	43200000	423F0000	43200000	427C0000	42C08F0A
(4960)	00000000	00000000	42210000	42BFCC32	41F00000	42BFCC32	00000000	00000000	00000000	00000000
(5000)	00000000	00000000	42550000	42BFCC32	41200000	431FF750	41A00000	431FF750	00000000	43200000
(5040)	43758000	42100000	42C20000	42100000	442A4000	42100000	441B6000	42100000	43E50000	42100000
(5080)	457A8000	43200000	432B8000	42200000	423A0000	43200000	42430000	43200000	42B90000	43200000
(5120)	DFFFFFFF	FFFFFFFF	0000FFFF	FFFF0000	00FFFFFF	00000000	4047AE14	408F5C29	00000000	D3A3B000
(5160)	00000000	00000000	00000000	00000000	00000000	00000000	00000000	00000000	00000000	00000000
(5200)	0002001A	00384400	016D07BD	001F000C	04E822ED	016D07BD	001F000C	04EFF214	413FFFFF	4143D70A
(5240)	41433333	40F5C28F	08000000	461803BC	4568A2BF	45172CF8	43BE4690	457A03E0	43220000	431AF8A9
(5280)	43872000	43200379	C328A000	431FF74B	00000000	00000000	00000000	00000000	00000000	42BFCBE2
(5320)	C1100000	42BFCBE2	00000000	00000000	42C50000	43200000	423A0000	43200000	425B0000	42BFCBE2
(5360)	00000000	00000000	42250000	42C02D4D	41800000	42BFCBE2	00000000	00000000	00000000	00000000
(5400)	00000000	00000000	42590000	42BFCBE2	00000000	431FFD60	41900000	43200377	00000000	43200000
(5440)	43748000	42100000	42CF0000	42100000	442AC000	42100000	441A4000	42100000	43EE0000	42100000
(5480)	457B5000	43200000	432E2000	42200000	42400000	43200000	42420000	43200000	42C70000	43200000
(5520)	DFFFFFFF	FFFFFFFF	0000FFFF	FFFF0000	00FFFFFF	00000000	4047AE14	408F5C29	00000000	D3A3B000
(5560)	00000000	00000000	00000000	00000000	00000000	00000000	00000000	00000000	00000000	00000000
(5600)	0002001A	00384800	016D07BD	001F000C	04EFF205	016D07BD	001F000C	04F7C118	413FFFFF	4143D70A
(5640)	41433333	40F5C28F	08000000	461803DD	45689C92	45172DD2	43BE4690	457A03E0	43237000	431BF85C
(5680)	4388D000	4320036F	C32B0000	431FF743	00000000	00000000	00000000	00000000	00000000	42BFCBE2
(5720)	C1200000	42BFCBE2	00000000	00000000	42A90000	43200000	423E0000	43200000	42660000	42C02D4D
(5760)	00000000	00000000	42270000	42BFCB8A	41400000	42BFCB8A	00000000	00000000	00000000	00000000
(5800)	00000000	00000000	42590000	42BFCB8A	00000000	431FF743	41800000	431FF743	00000000	43200000
(5840)	43790000	42100000	42C50000	42100000	442B4000	42100000	44190000	42100000	43E30000	42100000
(5880)	457A3800	43200000	432AE000	42200000	42550000	43200000	42470000	43200000	42B30000	43200000
(5920)	DFFFFFFF	FFFFFFFF	0000FFFF	FFFF0000	00FFFFFF	00000000	4047AE14	408F5C29	00000000	D3A3B000
(5960)	00000000	00000000	00000000	00000000	00000000	00000000	00000000	00000000	00000000	00000000
(6000)	0002001A	00384C00	016D07BD	001F000C	04F7C11E	016D07BD	001F000C	04FF9030	413FFFFF	4143D70A
(6040)	41433333	40F5C28F	08000000	461803FE	45689634	45172EAD	43BE4690	457A03E0	43232000	431BF868
(6080)	437F2000	431FF750	C32BD000	431FF750	00000000	00000000	00000000	00000000	41100000	42BFCC32
(6120)	00000000	42BFCC32	00000000	00000000	42A50000	43200000	42390000	43200000	425B0000	42BFCC32
(6160)	00000000	00000000	42280000	42BFCC32	41800000	42BFCC32	00000000	00000000	00000000	00000000
(6200)	00000000	00000000	425D0000	42BFCC32	41100000	431FFD65	41A00000	4320037C	00000000	43200000
(6240)	43780000	42100000	42C60000	42100000	442B8000	42100000	44196000	42100000	43ED0000	42100000
(6280)	457B9800	43200000	432E2000	42200000	423F0000	43200000	42510000	43200000	42E30000	43200000
(6320)	DFFFFFFF	FFFFFFFF	0000FFFF	FFFF0000	00FFFFFF	00000000	4047AE14	408F5C29	00000000	D3A3B000
(6360)	00000000	00000000	00000000	00000000	00000000	00000000	00000000	00000000	00000000	00000000

FILE 71 RECORD 36 LENGTH 1200BYTES

(0)	0002001A	00385000	016D07BD	001F000C	04FF9037	016D07BD	001F000C	05075F49	413FFFFF	4143D70A
(40)	41433333	40F5C28F	08000000	4618041F	45688FEF	45172F87	43BE4690	457A03E0	43234000	431C0AA2
(80)	4384B000	431FF745	C32D2000	43200FA0	00000000	00000000	00000000	00000000	41200000	42BFCB8A
(120)	00000000	42C02CF5	00000000	00000000	42BD0000	43200000	423B0000	43200000	426E0000	42C02CF6
(160)	00000000	00000000	421D0000	42BFCC32	41900000	42C02D9D	00000000	00000000	00000000	00000000
(200)	00000000	00000000	424B0000	42BFCC32	41200000	431FF745	41A00000	431FF745	00000000	43200000
(240)	43768000	42100000	42D60000	42100000	442D8000	42100000	4419E000	42100000	43F40000	42100000
(280)	457D1800	43200000	432DA000	42200000	42310000	43200000	42430000	43200000	42C70000	43200000
(320)	DFFFFFFF	FFFFFFFF	0000FFFF	FFFF0000	00FFFFFF	00000000	4047AE14	408F5C29	00000000	D3A3B000
(360)	00000000	00000000	00000000	00000000	00000000	00000000	00000000	00000000	00000000	00000000
(400)	0002001A	00385400	016D07BD	001F000C	05075F4F	016D07BD	001F000C	050F2E62	413FFFFF	4143D70A
(440)	41433333	40F5C28F	08000000	46180440	4568899D	45173062	43BE4690	457A03E0	43200000	431BF863
(480)	437E2000	431FF74B	C32C7000	431FF74B	00000000	00000000	00000000	00000000	00000000	42AFD03C
(520)	C1100000	42BFCBE2	00000000	00000000	42B30000	43200000	42430000	43200000	42610000	42BFCBE2
(560)	00000000	00000000	42210000	42BFCC32	41A00000	42BFCC32	00000000	00000000	00000000	00000000
(600)	00000000	00000000	42580000	42BFCC32	41100000	43200377	41800000	43200377	00000000	43200000
(640)	43768000	42100000	42C10000	42100000	442D0000	42100000	441A4000	42100000	43E30000	42100000
(680)	457D5000	43200000	432C2000	42200000	42350000	43200000	424B0000	43200000	42DC0000	43200000
(720)	DFFFFFFF	FFFFFFFF	0000FFFF	FFFF0000	00FFFFFF	00000000	4047AE14	408F5C29	00000000	D3A3B000
(760)	00000000	00000000	00000000	00000000	00000000	00000000	00000000	00000000	00000000	00000000

```
(   800)  0002001A  00385800  016D07BD  001F000C  050F2E67  016D07BD  001F000C  0515FD7A  413FFFFF  4143D70A
(   840)  41433333  40F5C28F  08000000  46180461  4568834B  4517313C  43BE4614  457A03E0  43231000  431BF85D
(   880)  43A02000  43200373  C32C4000  431FF745  00000000  00000000  00000000  00000000  00000000  42BFCBB9
(   920)  C1200000  42BFCBB9  00000000  00000000  42C60000  43200000  422D0000  43200000  42620000  42C08E90
(   960)  00000000  00000000  42280000  42BFCC09  41F00000  42C02D74  00000000  00000000  00000000  00000000
(  1000)  00000000  00000000  42610000  42BFCC09  00000000  431FF745  41800000  431FF745  00000000  43200000
(  1040)  43780000  42100000  42CB0000  42100000  442D8000  42100000  4418E000  42100000  43EB0000  42100000
(  1080)  45704000  43200000  432A8000  42200000  42340000  43200000  42570000  43200000  42BE0000  43200000
(  1120)  DFFFFFFF  FFFFFFFF  0000FFFF  FFFF0000  00FFFFFF  00000000  4047AE14  408F5C29  00000000  D3A3B000
(  1160)  00000000  00000000  00000000  00000000  00000000  00000000  00000000  00000000  00000000  00000000
```

FILE	INPUT RECS.	DATA RECORDS INPUT	MAX. SIZE	READ ERROR SUMMARY PERM	ZERO B	SHORT	UNDEF.	INPUT RETRIES #RECS.	TOTAL#
71	36	38	6400	0	0	0	0	0	0

EOJ DUMP STOPPED AFTER FILE 71 # OF PERMANENT READ ERRORS 0

START TIME 06/27/83 10:24:58 STOP TIME 06/27/83 10:30:51

$$

8/18/78 — 12/31/79
1/1/80 — 12/31/81

1978 18 8

RECORD 1 OF FILE 2
LENGTH = 6400 BYTES

0001001A	000F1A00	00E607BA	00120008	0000ABF4	00E607BA	00120008	00029FBA	413FFFFF	413FFFFF
41433333	40F5C28F	08000000	45967C8E	C4D68595	45105007	43BCDAF8	457A0410	425A0000	426F0BFD
C32E8000	42806BE8	C2390000	427FAA84	42810000	427FAA85	41200000	427FAA85	00000000	417EE926
00000000	00000000	00000000	00000000	41C00000	42800000	42110000	42800000	00000000	00000000
00000000	42384762	00000000	423FD543	00000000	423FD543	00000000	42800000	00000000	42800000
00000000	42800000	00000000	424035F4	00000000	42800B36	00000000	42806BE8	00000000	42800000
00000000	00000000	4315E000	42100000	00000000	00000000	00000000	00000000	00000000	00000000
45AB0000	42800000	00000000	00000000	42110000	42800000	42250000	42800000	42710000	42800000
DFFFFFFF	FFFFFFFF	0000FFFF	FFFF0000	00FFFFFF	00000000	4111C28F	4111EB85	00000000	D3A3B000
00000000	00000000	00000000	00000000	00000000	00000000	00000000	00000000	00000000	00000000
0001001A	000F1B00	00E607BA	00120008	00029FBB	00E607BA	00120008	00049381	413FFFFF	413FFFFF
41433333	40F5C28F	08000000	459682B7	C4D68EB7	451050A5	43BCDB74	457A0410	42750000	42708F11
C3278000	42806C40	C23E0000	42806C40	427F0000	42806C40	41200000	427FAADC	00000000	00000000
00000000	00000000	00000000	00000000	41C00000	42800000	42170000	42800000	00000000	00000000
00000000	427FAADC	00000000	42806C40	00000000	427F4A2A	00000000	42800000	00000000	42800000
00000000	42800000	00000000	42800B8E	00000000	42800B8E	00000000	427FAADC	00000000	42800000
00000000	00000000	00000000	00000000	00000000	00000000	00000000	00000000	00000000	00000000
45AA4000	42800000	4328C000	42100000	421B0000	42800000	422A0000	42800000	42760000	42800000
DFFFFFFF	FFFFFFFF	0000FFFF	FFFF0000	00FFFFFF	00000000	4111C28F	4111EB85	00000000	D3A3B000
00000000	00000000	00000000	00000000	00000000	00000000	00000000	00000000	00000000	00000000
0001001A	000F1C00	00E607BA	00120008	00049381	00E607BA	00120008	000C629C	414051EB	413FFFFF
41433333	40F5C28F	08000000	459688E0	C4D69823	45105143	43BCDA7C	457A0410	431EE000	431BFF5E
C390A000	431FEA8D	C2D60000	431FFCAE	431BD000	431FF6A3	C1600000	43200000	41100000	42BFE0A7
00000000	42BF1F44	41100000	42C04159	422A0000	43200000	42400000	43200000	41200000	42C04159
00000000	42C040B1	00000000	42C040B1	00000000	42BFDFFF	00000000	43200000	00000000	43200000
00000000	43200000	00000000	42BF1E9B	41100000	431FFCAE	00000000	431FFCAE	00000000	43200000
42F10000	42100000	4315E000	42100000	42130000	42100000	41500000	42100000	45142000	42100000
462AC000	43200000	434D8000	42200000	42630000	43200000	428A0000	43200000	43197000	43200000
DFFFFFFF	FFFFFFFF	0000FFFF	FFFF0000	00FFFFFF	00000000	4111C28F	4111EB85	00000000	D3A3B000
00000000	00000000	00000000	00000000	00000000	00000000	00000000	00000000	00000000	00000000
0001001A	000F2000	00E607BA	00120008	000C629D	00E607BA	00120008	001431B7	413FFFFF	413FFFFF
41433333	40F5C28F	08000000	4596A180	C4D6BD52	451053B9	43BCDAF8	457A0410	431B5000	431BF969
C3AE2000	43200000	C2C20000	431FF0B2	C31A7000	43200000	41900000	431FF6BD	00000000	42BF1F72
41100000	42C04183	00000000	42BF801F	42380000	43200000	42420000	43200000	41100000	42C04182
00000000	42C041A6	00000000	42BF1F95	00000000	42C041AB	00000000	43200000	00000000	43200000
00000000	43200000	00000000	42BFE0F9	00000000	431FFCCA	00000000	431FFCCA	00000000	43200000
42D30000	42100000	43160000	42100000	42160000	42100000	41300000	42100000	45140000	42100000
462AAC00	43200000	43514000	42200000	42700000	43200000	42A50000	43200000	431CE000	43200000
DFFFFFFF	FFFFFFFF	0000FFFF	FFFF0000	00FFFFFF	00000000	4111C28F	4111EB85	00000000	D3A3B000
00000000	00000000	00000000	00000000	00000000	00000000	00000000	00000000	00000000	00000000
0001001A	000F2400	00E607BA	00120008	001431B8	00E607BA	00120008	001C00D4	413FFFFF	413FFFFF
41433333	40F5C28F	08000000	4596BA1C	C4D6E319	45105630	43BCDAF8	457A0410	431C2000	431BF95C
C3935000	43200000	C2CC0000	43200000	431DD000	431FF6AD	C1700000	43200000	41300000	42C04126
00000000	42C0412A	41100000	42BFE078	42250000	43200000	424A0000	43200000	41300000	42BFE079
00000000	42BF1F48	00000000	42BFE0A7	00000000	42BFE0A7	00000000	43200000	00000000	43200000
00000000	43200000	00000000	42C04159	00000000	431FF6AD	00000000	431FF6AC	00000000	43200000
42E50000	42100000	4317C000	42100000	42120000	42100000	41700000	42100000	45180000	42100000
462A7800	43200000	43544000	42200000	427D0000	43200000	428F0000	43200000	431C7000	43200000
DFFFFFFF	FFFFFFFF	0000FFFF	FFFF0000	00FFFFFF	00000000	4111C28F	4111EB85	00000000	D3A3B000
00000000	00000000	00000000	00000000	00000000	00000000	00000000	00000000	00000000	00000000
0001001A	000F2800	00E607BA	00120008	001C00D3	00E607BA	00120008	0023CFEE	413FFFFF	413FFFFF
41433333	40F5C28F	08000000	4596D2B3	C4D70823	451058A5	43BCDAF8	457A0410	4322E000	431BFF66

RECORD 48 OF FILE 49
LENGTH = 4400 BYTES

1979 31 12

0001001A	00388000	016D07BB	001F000C	04C6966B	016D07BB	001F000C	04CE6593	413FFFFF	413FFFFF
41433333	40F5C28F	08000000	461598E1	459C9FB8	448DB2F4	43BD6788	457A03E0	42C70000	431C021A
C4427000	431FF644	C29E0000	43200000	C3C92000	43200000	C24D0000	43200000	41100000	42BFADB3
00000000	42C06F9F	00000000	42BF4CB3	421A0000	43200000	42320000	43200000	41300000	42C00EA5
00000000	42C00E77	00000000	42C00E7C	41100000	42C00E7E	00000000	43200000	00000000	43200000
00000000	43200000	41100000	42C00E7D	00000000	431FF646	00000000	431FF646	00000000	43200000
42A40000	42100000	42E90000	42100000	42980000	42100000	424E0000	42100000	43120000	42100000
4480B000	43200000	43396000	42200000	423F0000	43200000	42590000	43200000	4311A000	43200000
DFFFFFFF	FFFFFFFF	0000FFFF	FFFF0000	00FFFFFF	00000000	407AE148	40A66666	00000000	D3A3B000
00000000	00000000	00000000	00000000	00000000	00000000	00000000	00000000	00000000	00000000
0001001A	00388400	016D07BB	001F000C	04CE6584	016D07BB	001F000C	04D63496	413FFFFF	413FFFFF
41433333	40F5C28F	08000000	4615990F	459C9DE7	448DC9A1	43BD6788	457A03E0	42980000	431C020B
C43F4800	431FF635	C2A80000	431FF634	C3D54000	431FF634	C2650000	431FFC45	41300000	42BF4C11
00000000	42C00DFE	00000000	42BFAD05	422A0000	43200000	42350000	43200000	41600000	42C06EF7
00000000	42BFAD2C	00000000	42BFAD32	41100000	42C06F24	00000000	43200000	00000000	43200000
00000000	43200000	41200000	42BFAD32	00000000	431FFC44	00000000	43200000	00000000	43200000
42B60000	42100000	4310C000	42100000	429D0000	42100000	424E0000	42100000	43160000	42100000
4483C000	43200000	433AA000	42200000	42340000	43200000	42610000	43200000	43133000	43200000
DFFFFFFF	FFFFFFFF	0000FFFF	FFFF0000	00FFFFFF	00000000	407AE148	40A66666	00000000	D3A3B000
00000000	00000000	00000000	00000000	00000000	00000000	00000000	00000000	00000000	00000000
0001001A	00388800	016D07BB	001F000C	04D6349D	016D07BB	001F000C	04DE03C4	413FFFFF	413FFFFF
41433333	40F5C28F	08000000	4615993D	459C9C1C	448DE04C	43BD6804	457A03E0	42BC0000	431BEFE9
C4440000	43200000	C2970000	431FF644	C3B7B000	431FFC54	C2390000	431FFC55	41400000	42C00E77
00000000	42BFAD84	00000000	42C00E7C	42160000	43200000	42280000	43200000	41400000	42BFAD84
00000000	42BFADB2	00000000	42C06F9F	00000000	42BFADAC	00000000	43200000	00000000	43200000
00000000	43200000	00000000	42BF4CB3	00000000	431FFC55	00000000	431FF646	00000000	43200000
42A40000	42100000	42E50000	42100000	42B00000	42100000	42470000	42100000	43132000	42100000
447C9000	43200000	4337C000	42200000	42480000	43200000	42640000	43200000	43107000	43200000
DFFFFFFF	FFFFFFFF	0000FFFF	FFFF0000	00FFFFFF	00000000	407AE148	40A66666	00000000	D3A3B000
00000000	00000000	00000000	00000000	00000000	00000000	00000000	00000000	00000000	00000000
0001001A	00388C00	016D07BB	001F000C	04DE03B5	016D07BB	001F000C	04E5D2C8	413FFFFF	413FFFFF
41433333	40F5C28F	08000000	4615996B	459C9A4D	448DF6F9	43BD6804	457A03E0	C2B10000	431C021B
C43D3000	43200000	C2B40000	43200000	C3981000	43200000	C2420000	431FFC5A	41300000	42C06FC6
00000000	42BFADDA	00000000	42BFADDA	42280000	43200000	422C0000	43200000	41500000	42C06FCC
00000000	42BFADB1	00000000	42C06F9F	00000000	42C00EA5	00000000	43200000	00000000	43200000
00000000	43200000	41100000	42C00EA6	00000000	431FFC5A	00000000	431FFC5B	00000000	43200000
42A20000	42100000	42F10000	42100000	42870000	42100000	423E0000	42100000	43104000	42100000
4477C000	43200000	433BA000	42200000	42580000	43200000	427B0000	43200000	43120000	43200000
DFFFFFFF	FFFFFFFF	0000FFFF	FFFF0000	00FFFFFF	00000000	407AE148	40A66666	00000000	D3A3B000
00000000	00000000	00000000	00000000	00000000	00000000	00000000	00000000	00000000	00000000
0001001A	00389000	016D07BB	001F000C	04E5D2CE	016D07BB	001F000C	04EDA1E1	413FFFFF	413FFFFF
41433333	40F5C28F	08000000	4615999A	459C9866	448E0DA5	43BD6788	457A03E0	42BA0000	431C0219
C4435000	431FF035	C2930000	43200000	C39B7000	431FFC55	C2430000	431FF646	41200000	42BFADAC
00000000	42BFADAC	00000000	42C06F9F	421E0000	43200000	42210000	43200000	41500000	42C00EA6
00000000	42BF4CB3	00000000	42BFADAC	00000000	42BFADAD	00000000	43200000	00000000	43200000
00000000	43200000	41200000	42C00EA5	00000000	43200000	00000000	431FFC55	00000000	43200000
42B70000	42100000	42E80000	42100000	427B0000	42100000	42480000	42100000	43120000	42100000
44784800	43200000	433C0000	42200000	42470000	43200000	425B0000	43200000	43133000	43200000
DFFFFFFF	FFFFFFFF	0000FFFF	FFFF0000	00FFFFFF	00000000	407AE148	40A66666	00000000	D3A3B000
00000000	00000000	00000000	00000000	00000000	00000000	00000000	00000000	00000000	00000000
0001001A	00389400	016D07BB	001F000C	04EDA1E7	016D07BB	001F000C	04F570FA	413FFFFF	413FFFFF
41433333	40F5C28F	08000000	461599C9	459C967E	448E2450	43BD6804	457A03E0	42AF0000	431C021F

RECORD 1 OF FILE 51
LENGTH = 6400 BYTES

1980

0001001A	0038B800	000107BC	00010001	000D89DE	000107BC	00010001	000F7DA4	413FFFFF	413FFFFF
41433333	40F5C28F	08000000	4615A62C	459B074F	448EF342	43BD6804	457A03E0	00000000	00000000
00000000	00000000	00000000	00000000	00000000	00000000	00000000	00000000	00000000	42381072
00000000	424004F1	00000000	00000000	41300000	42400000	41400000	42200000	00000000	417F47F0
00000000	00000000	00000000	00000000	00000000	00000000	00000000	00000000	00000000	00000000
00000000	00000000	00000000	00000000	00000000	00000000	00000000	00000000	00000000	00000000
00000000	00000000	00000000	00000000	00000000	00000000	00000000	00000000	42F50000	42100000
43628000	421B0000	00000000	00000000	00000000	00000000	00000000	00000000	00000000	00000000
DFFFFFFF	FFFFFFFF	0000FFFF	FFFF0000	00FFFFFF	00000000	406E147B	409EB852	00000000	D3A3B000
00000000	00000000	00000000	00000000	00000000	00000000	00000000	00000000	00000000	00000000
0001001A	0038B900	000107BC	00010001	000F7DA4	000107BC	00010001	001558F6	413FFFFF	413FFFFF
41433333	40F5C28F	08000000	4615A637	459B06E8	448EF8EC	43BD6804	457A03E0	428B0000	4314F3EF
C43AC800	431801CB	C2730000	4317F5A9	C341C000	43100131	C21F0000	42FFB223	41200000	4287FE57
00000000	42806ADB	00000000	428009E2	421A0000	43180000	422A0000	43180000	41700000	427FA8E9
00000000	42B87B02	00000000	42BFAD84	00000000	42BFAD83	00000000	43180000	00000000	43180000
00000000	43180000	00000000	42C06F77	00000000	4317FBBB	00000000	43100131	00000000	43180000
429F0000	42100000	43100000	42100000	42770000	42100000	423A0000	42100000	00000000	00000000
44557000	43180000	433AE000	42200000	422E0000	43180000	42330000	43100000	42C30000	43180000
DFFFFFFF	FFFFFFFF	0000FFFF	FFFF0000	00FFFFFF	00000000	406E147B	409EB852	00000000	D3A3B000
00000000	00000000	00000000	00000000	00000000	00000000	00000000	00000000	00000000	00000000
0001001A	0038BC00	000107BC	00010001	001558F7	000107BC	00010001	001D280F	413FFFFF	413FFFFF
41433333	40F5C28F	08000000	4615A65A	459B0577	448F09EA	43BD6804	457A03E0	C2830000	431C0220
C43C1000	431FFC5C	C2A10000	43200000	C3855000	431FFC5C	C2430000	431FFC5C	41100000	42BF4CE1
00000000	42C06FCC	00000000	42C00ED3	42240000	43200000	423D0000	43200000	41200000	42C00ED3
00000000	42BFADDA	00000000	42BFADDA	00000000	42C06FCC	00000000	43200000	00000000	43200000
00000000	43200000	41100000	42C00ED3	00000000	431FF64D	00000000	43200000	00000000	43200000
42980000	42100000	4310E000	42100000	427B0000	42100000	42310000	42100000	42F50000	42100000
44727000	43200000	433A0000	42200000	422D0000	43200000	42690000	43200000	43135000	43200000
DFFFFFFF	FFFFFFFF	0000FFFF	FFFF0000	00FFFFFF	00000000	406E147B	409EB852	00000000	D3A3B000
00000000	00000000	00000000	00000000	00000000	00000000	00000000	00000000	00000000	00000000
0001001A	0038C000	000107BC	00010001	001D2810	000107BC	00010001	0024F728	413FFFFF	413FFFFF
41433333	40F5C28F	08000000	4615A688	459B03A4	448F2093	43BD6788	457A03E0	42A80000	431C021A
C43F4000	431FF035	C29F0000	43200000	C38EC000	431FF645	C2480000	431FFC55	00000000	42BFADAC
00000000	42BFADAC	00000000	42BFADAD	421D0000	43200000	42310000	43200000	00000000	42C00EA5
00000000	42C06F9F	00000000	42C00EA5	00000000	42C00EA5	00000000	43200000	00000000	43200000
00000000	43200000	00000000	42BF4CB3	00000000	43200000	00000000	431FF645	00000000	43200000
42AC0000	42100000	42F40000	42100000	42780000	42100000	42260000	42100000	43124000	42100000
4474D800	43200000	4337C000	42200000	42370000	43200000	42570000	43200000	43112000	43200000
DFFFFFFF	FFFFFFFF	0000FFFF	FFFF0000	00FFFFFF	00000000	406E147B	409EB852	00000000	D3A3B000
00000000	00000000	00000000	00000000	00000000	00000000	00000000	00000000	00000000	00000000
0001001A	0038C400	000107BC	00010001	0024F728	000107BC	00010001	002CC641	413FFFFF	413FFFFF
41433333	40F5C28F	08000000	4615A6B7	459B01BA	448F373E	43BD6788	457A03E0	C2C10000	431BFC0A
C43EC800	43200000	C2AD0000	431FEA26	C3908000	43200000	C23C0000	43200000	41100000	42C00EA6
00000000	42C00EA6	00000000	42BF4CB3	42210000	43200000	423A0000	43200000	41200000	42C00EA5
00000000	42C00EA6	00000000	42C06F9F	00000000	42C00EA5	00000000	43200000	00000000	43200000
00000000	43200000	41200000	42BFADAD	00000000	431FF645	00000000	431FF646	00000000	43200000
42AC0000	42100000	42F60000	42100000	42710000	42100000	42300000	42100000	42F40000	42100000
44745000	43200000	43398000	42200000	42670000	43200000	42760000	43200000	43118000	43200000
DFFFFFFF	FFFFFFFF	0000FFFF	FFFF0000	00FFFFFF	00000000	406E147B	409EB852	00000000	D3A3B000
00000000	00000000	00000000	00000000	00000000	00000000	00000000	00000000	00000000	00000000
0001001A	0038C800	000107BC	00010001	002CC641	000107BC	00010001	00349559	413FFFFF	413FFFFF
41433333	40F0A3D6	08000000	4615A6E5	459AFFDA	448F4DE6	43BD6804	457A03E0	42BA0000	431BF602

RECORD 36 OF FILE 120
LENGTH = 1200 BYTES

1981 31 12

0002001A	00385000	016D07BD	001F000C	04FF9037	016D07BD	001F000C	05075F49	413FFFFF	4143D70A
41433333	40F5C28F	08000000	4618041F	45688FEF	45172F87	43BE4690	457A03E0	43234000	431C0AA2
4384B000	431FF745	C32D2000	43200FA0	00000000	00000000	00000000	00000000	41200000	42BFCB8A
00000000	42C02CF5	00000000	00000000	42BD0000	43200000	423B0000	43200000	426E0000	42C02CF6
00000000	00000000	421D0000	42BFCC32	41900000	42C02D9D	00000000	00000000	00000000	00000000
00000000	00000000	424B0000	42BFCC32	41200000	431FF745	41A00000	431FF745	00000000	43200000
43768000	42100000	42D60000	42100000	442D8000	42100000	4419E000	42100000	43F40000	42100000
457D1800	43200000	432DA000	42200000	42310000	43200000	42430000	43200000	42C70000	43200000
DFFFFFFF	FFFFFFFF	0000FFFF	FFFF0000	00FFFFFF	00000000	4047AE14	408F5C29	00000000	D3A3B000
00000000	00000000	00000000	00000000	00000000	00000000	00000000	00000000	00000000	00000000
0002001A	00385400	016D07BD	001F000C	05075F4F	016D07BD	001F000C	050F2E62	413FFFFF	4143D70A
41433333	40F5C28F	08000000	46180440	4568899D	45173062	43BE4690	457A03E0	43200000	431BF863
437E2000	431FF74B	C32C7000	431FF74B	00000000	00000000	00000000	00000000	00000000	42AFD03C
C1100000	42BFCBE2	00000000	00000000	42B30000	43200000	42430000	43200000	42610000	42BFCBE2
00000000	00000000	42210000	42BFCC32	41A00000	42BFCC32	00000000	00000000	00000000	00000000
00000000	00000000	42580000	42BFCC32	41100000	43200377	41800000	43200377	00000000	43200000
43768000	42100000	42C10000	42100000	442D0000	42100000	441A4000	42100000	43E30000	42100000
457D5000	43200000	432C2000	42200000	42350000	43200000	424B0000	43200000	42DC0000	43200000
DFFFFFFF	FFFFFFFF	0000FFFF	FFFF0000	00FFFFFF	00000000	4047AE14	408F5C29	00000000	D3A3B000
00000000	00000000	00000000	00000000	00000000	00000000	00000000	00000000	00000000	00000000
0002001A	00385800	016D07BD	001F000C	050F2E67	016D07BD	001F000C	0516FD7A	413FFFFF	4143D70A
41433333	40F5C28F	08000000	46180461	4568834B	4517313C	43BE4614	457A03E0	43231000	431BF85D
43A02000	43200373	C32C4000	431FF745	00000000	00000000	00000000	00000000	00000000	42BFCBB9
C1200000	42BFCBB9	00000000	00000000	42C60000	43200000	422D0000	43200000	42620000	42C08E90
00000000	00000000	42280000	42BFCC09	41F00000	42C02D74	00000000	00000000	00000000	00000000
00000000	00000000	42610000	42BFCC09	00000000	431FF745	41800000	431FF745	00000000	43200000
43780000	42100000	42CB0000	42100000	442D8000	42100000	4418E000	42100000	43EB0000	42100000
457C4000	43200000	432A8000	42200000	42340000	43200000	42570000	43200000	42BE0000	43200000
DFFFFFFF	FFFFFFFF	0000FFFF	FFFF0000	00FFFFFF	00000000	4047AE14	408F5C29	00000000	D3A3B000
00000000	00000000	00000000	00000000	00000000	00000000	00000000	00000000	00000000	00000000

36 RECORDS IN FILE 120 OF TAPE