ISEE - 1
SOLAR WIND ION MOMENTS X - FAN

77-102A-01N

ISEE - 1
LEPEDEA 3-D DISTRIBUTION FUNCTION

77-102A-03G

REQ. AGENT	ACQ. AGENT
JAR	SK

ISEE-1

SOLAR WIND ION MOMENTS X-FAN

77-102A-01N

This data set consists of one magnetic tape. The tape is 6250 bpi, 9-track, Binary, with 21 files (VAX back-up format, 7 data & label files). It was created on a VAX computer. The D and C numbers and time span are as follows:

D#	C#	Files	Time Span
D-79640	C-27189	21	10/30/77 - 01/30/84

77-102A-01N

Los Alamos

Los Alamos National Laboratory
Los Alamos, New Mexico 87545

DATE: 19 June 1989
IN REPLY REFER TO: ESS-8:89-35-607
MAIL STOP: D438
TELEPHONE: (505) 667-5389

Dr. Sumant Krishnaswamy
Code 633
NSSDC
NASA/Goddard Space Flight Center
Greenbelt, MD 20771

Dear Sumant:

Under separate cover I am sending you one magnetic tape containing high temporal resolution solar wind ion moments derived from measurements obtained by the Los Alamos X-Fan Solar Wind Ion Experiment on ISEE-1. The tape contains 7 files, 1 for each of the solar wind seasons (roughly July through December) from 1977 through 1983. The temporal resolution of these data is 24 seconds in high data rate and 48 seconds in low data rate. Each data record in these files contains the date (YYMMDD), universal time in seconds, universal time in HHMMSS, the proton density (cm^{-3}), flow speed (km/sec), flow azimuth (degs., with 0° corresponding to flow from the sun [corrected for aberration] and positive azimuths corresponding to flow toward dawn), flow latitude (degs., with positive latitudes corresponding to flow toward the south), the minimum proton temperature (deg., K),, the maximum proton temperature (deg., K), and the alpha/proton fraction (alpha fraction = 0.00 means no determination made). We have not attempted to cross-calibrate our density values with those from other experiments. However, we suspect that our densities tend to be too low in the later years because of detector degradation. We suggest that cross-calibration using, for example, the IMP values would be a useful exercise for the NSSDC before these data are made available to the general public. Please note also that many of these measurements were obtained within the foreshock region where the solar wind flow is affected by the waves present there.

I am enclosing a sample listing of the data with the read format indicated.

Please contact me (Ph: 505-667-5389; SPAN: ESSDP1::073500) if you have any questions concerning this submission.

Sincerely,

J. T. Gosling

JTG/st

Enc. a/s

Cy: K. Ogilvie, GSFC/692
R. Wales, GSFC/602
CRM-4 (2)

An Equal Opportunity Employer/Operated by University of California

Documentation for NSSDC ID 77-102A-01N
B42559

p.1 of 2

Documentation for ISEE-1 Cross Fan Ion data files submitted to NSSDC

FILE ORGANIZATION: Sequential

RECORD FORMAT: Variable length, maximum 85 bytes

RECORD ATTRIBUTES: Carriage return, carriage control

```
C
C DEFINITION:. 10 ISEE-1 CROSS-FAN ION MOMENTS
C ELEMENTS:
C   1   IYYMMDD
C   2   SECONDS
C   3   UTIME            HHMMSS
C   4   DENSITY          COMBINED INTEGRATION                    (cm-3)
C   5   FLOW SPEED       COMBINED INTEGRATION                    (km/sec)
C   6   FLOW ANGLE       COMBINED INTEGRATION                    (deg)
C   7   FLOW LATITUDE    COMBINED INTEGRATION                    (deg)
C   8   TPER (MIN)       COMBINED INTEGRATION                    (K)
C   9   TPAR (MAX)       COMBINED INTEGRATION                    (K)
C  10   ALPHA FRACTION   COMBINED MODEL
```

FORMAT:

```
1000    FORMAT (1X,I6,1X,2(F8.1,1X),5(1PE11.4,1X),15(/,6(1PE11.4,1X)))
```

READ:

```
        READ (1,1000)IYYMMDD,SEC,UTIME,(PLASMA(I),I=4,10)
```

SAMPLE:

```
 771030  14157.0  35557.0  5.8983E+00  4.4001E+02 -2.3133E+00  1.5247E-01  1.0174E+05
 3.6686E+05  7.1104E-02
 771030  14206.0  35646.0  6.7653E+00  3.5366E+02 -2.6616E+00 -9.1330E+00  2.7225E+05
 5.4985E+05  0.0000E+00
 771030  14254.0  35734.0  1.0128E+01  3.9360E+02  1.6266E+01  6.1878E-01  2.0082E+05
 5.1891E+05  0.0000E+00
 771030  14303.0  35823.0  7.5370E+00  3.8160E+02  4.7102E+00  1.0105E-01  1.4862E+05
 3.0551E+05  4.0966E-02
 771030  14352.0  35912.0  8.2415E+00  4.3298E+02  1.7180E+00 -1.9851E+00  9.9189E+04
 2.0530E+05  4.4581E-02
 771030  14400.0  40000.0  1.4547E+01  4.2747E+02 -2.0509E+00 -1.2732E+00  1.1490E+05
 1.6301E+05  0.0000E+00
 771030  14449.0  40049.0  5.5504E+00  4.1908E+02  1.0272E+01  1.0591E+00  8.5184E+04
 5.1876E+05  0.0000E+00
```

7 Files
2807 blocks
Block size = 32767
Density = 6250

ICSDX = TAPE NAME

FILE NAME

Directory HSC014$MUA0:[]

77ISEE1.4;1	189	5-JUN-1989	00:00
78ISEE1.4;1	406	6-JUN-1989	00:00
79ISEE1.4;1	453	9-JUN-1989	00:00
80ISEE1.4;1	505	9-JUN-1989	00:00
81ISEE1.4;1	436	9-JUN-1989	00:00
82ISEE1.4;1	418	12-JUN-1989	00:00
83ISEE1.4;1	400	13-JUN-1989	00:00

Total of 7 files, 2807 blocks.

Density - 6250

Block size = 32767

17-1024-01N

p. 2 of 2

77-102A-03G
ISEE-1

REQ. AGENT	ACQ. AGENT
RLR CMW	SK

ISEE-1

LEPEDEA 3-D DISTRIBUTION FUNCTION

77-102A-03G

This data set consists of 60 magnetic tapes. The tapes are 6250 bpi, binary, created on the VAX-11/780 computer. The D and C numbers and the time spans are as follows:

D#	C#	FILES	TIME SPAN
D-79630	C-27354	1	11/01/77 - 11/24/77
D-79631	C-27355	1	11/25/77 - 12/13/77
D-79632	C-27356	1	12/13/77 - 01/08/78
D-79633	C-27357	1	01/08/78 - 01/29/78
D-79634	C-27358	1	01/29/78 - 02/19/78
D-79635	C-27359	1	02/19/78 - 03/13/78
D-79636	C-27360	1	03/13/78 - 04/05/78
D-79637	C-27361	1	04/05/78 - 04/28/78
D-79638	C-27362	1	04/28/78 - 05/20/78
D-79639	C-27363	1	05/20/78 - 06/14/78
D-80524	C-28882	1	06/14/78 - 07/09/78
D-80525	C-28883	1	07/10/78 - 07/25/78
D-80526	C-28884	1	07/26/78 - 08/20/78
D-80527	C-28885	1	08/23/78 - 09/15/78
D-80528	C-28886	1	09/17/78 - 10/13/78
D-80529	C-28887	1	10/13/78 - 11/12/78
D-80530	C-28888	1	11/14/78 - 12/02/78
D-80531	C-28889	1	12/02/78 - 01/02/79
D-80532	C-28890	1	01/03/79 - 01/27/79
D-80533	C-28891	1	01/28/79 - 02/21/79
D-82756	C-28038	1	02/21/79 - 03/15/79
D-82757	C-28039	1	03/16/79 - 04/07/79
D-82758	C-28040	1	04/08/79 - 05/02/79
D-82759	C-28041	1	05/02/79 - 05/26/79
D-82760	C-28042	1	05/27/79 - 06/16/79
D-82761	C-28043	1	06/17/79 - 07/15/79
D-82762	C-28044	1	07/15/79 - 08/08/79
D-82763	C-28045	1	08/09/79 - 09/02/79
D-82764	C-28046	1	09/03/79 - 09/26/79
D-82765	C-28047	1	09/27/79 - 10/20/79
D-83992	C-28860	1	10/21/79 - 11/18/79
D-83993	C-28861	1	11/18/79 - 12/16/79
D-83994	C-28862	1	12/16/79 - 01/12/80
D-83995	C-28863	1	01/12/80 - 02/04/80
D-83996	C-28864	1	02/05/80 - 03/01/80
D-83997	C-28865	1	03/01/80 - 03/22/80
D-83998	C-28866	1	03/22/80 - 04/14/80
D-83999	C-28867	1	04/15/80 - 04/28/80
D-84000	C-28868	1	04/29/80 - 05/20/80
D-84001	C-28869	1	05/20/80 - 06/04/80

D#	C#	FILES	TIME SPAN
D-87921	C-29408	1	06/04/80 - 06/16/80
D-87922	C-29409	1	06/17/80 - 07/02/80
D-87923	C-29410	1	07/02/80 - 07/19/80
D-87924	C-29411	1	07/20/80 - 08/06/80
		2	08/06/80 - 08/12/80
D-87925	C-29412	1	08/12/80 - 08/27/80
		2	08/27/80 - 09/05/80
D-87926	C-29413	1	09/06/80 - 09/20/80
		2	09/20/80 - 09/29/80
D-87927	C-29414	1	09/30/80 - 10/12/80
		2	10/12/80 - 10/23/80
D-87928	C-29415	1	10/24/80 - 10/26/80
		2	10/26/80 - 11/12/80
D-87929	C-29416	1	11/12/80 - 11/18/80
		2	11/19/80 - 11/28/80
D-87930	C-29417	1	11/29/80 - 12/09/80
		2	12/09/80 - 12/14/80
D-98051	C-29460	1	12/14/80 - 12/31/80
D-98052	C-29461	1	10/15/82 - 11/06/82
D-98053	C-29462	1	11/06/82 - 11/21/82
		2	11/21/82 - 12/01/82
D-98054	C-29463	1	12/01/82 - 12/21/82
D-98055	C-29464	1	12/21/82 - 12/31/82
D-98056	C-29465	1	01/01/83 - 01/11/83
		2	01/12/83 - 01/30/83
D-98057	C-29466	1	01/30/83 - 03/02/83
D-98058	C-29467	1	03/02/83 - 04/06/83
D-98059	C-29468	1	04/06/83 - 04/12/83
		2	04/13/83 - 04/16/83
		3	04/17/83 - 04/23/83
		4	04/24/83 - 05/11/83
D-98060	C-29469	1	05/11/83 - 06/05/83
		2	06/05/83 - 06/19/83

These tapes are additional tapes to the dataset. The "C" tapes from this point are 3480 cartridges.The D and C numbers and the time spans are as follows:

D-101529	C-030296	3	06/19/83 - 08/04/83
D-101530	C-030297	3	08/04/83 - 09/12/83
D-101531	C-030298	3	09/12/83 - 10/20/83
D-101532	C-030299	2	10/20/83 - 11/25/83
D-101533	C-030300	1	11/25/83 - 12/27/83
D-101534	C-030301	1	03/01/86 - 03/26/83
D-101535	C-030302	1	03/26/83 - 04/13/86
D-101536	C-030303	4	04/13/86 - 04/30/86
D-101537	C-030304	4	04/30/86 - 05/17/86
D-101538	C-030305	3	05/17/86 - 06/01/86

17-102A-03G

The University of Iowa

Iowa City, Iowa 52242

Department of Physics and Astronomy

319/335-1686

1847

12 June 1989

not for general distribution; info is in RSIRS DB

Dr. S. Krishnaswamy
National Space Science Data Center
Goddard Space Flight Center
Code 633
Greenbelt, MD 20771

Dear Sumant,

I am forwarding to you the first ten tapes of Lepedea ISEE archived data. The enclosed documentation should explain the format and contents of the tapes. We are also sending you a simple Fortran code to read the tapes, together with sample output. As you will see from the code (TESTREAD) only the first twenty records are read and printed. Note that the first line of data output corresponds to the five proton detectors, and the second line corresponds to the five electron detectors. The sixteen sets of data are for the sixteen azimuthal sectors scanned by the instrument. In any user's guide to Lepedea data, the user should refer to the instrument description given in IEEE Transactions of Geoscience Electronics, Volume GE-16, page 221, 1978. I have taken one of the figures from this article to explain the angular coverage of the instrument.

We have a utility code written by our systems programmers which runs faster than the standard Fortran read used in TESTREAD. You probably have similar utilities.

Each tape is labeled sequentially, and the start and stop times are also listed. The ten tapes cover the period from day 305, 1977 to day 165, 1978. We are discontinuing further processing until we hear from you. Please note that I anticipate the 1983 and 1986 periods to be more difficult to process because of the decrease in instrument sensitivity. The documentation covering these periods may be changed when we come to this stage in our archiving.

Sincerely yours,

Cheryl

Cheryl Huang

74-102A-03G

B42560

Lepedea Archive Description

The archive intervals are:

10/77 - 2/80	Information from detectors 2 through 6, protons and electrons, saved.
1983 onward	Information from detectors 1, 2, 3, 5, 6, and 7 saved.

Data Organization:

- 1 physical record equals 10 logical records on tape (VAX binary)
- Tape density = 6250 bpi
- Tape type = 9 track
- Two successive EOF markers denote the end of tape
- Word length: 32 bits of real data
- Logical record length is fixed at 164 words for data prior to 1983, and 196 words thereafter
- Logical record type: header record and data record
- Header record structure:

  There are two types of header record.

  a) Cycle header record. This header will be written at the beginning of the tape and at each cycle change.

Word No.	Item Description
1	Year (2 digits) [See Note 1]
2	Day of year (3 digits)
3	Millisecond of day
4	Stepping sequence (either 3 or 4) [See Note 2]
5	Mode (either 1 or 5) [See Note 3]
6	Spacecraft location (GSE(X))
7	Spacecraft location (GSE(Y))
8	Spacecraft location (GSE(Z))
9 - end	-111

  b) Signal header record. This record will be written when there is a mode change, stepping sequence change or data gap. -999 is stored in this record from the first to the last word. After a signal header record a cycle header record always follows.

- Data record structure: The data record is written for each energy step. After one cycle header record the data records for that cycle are written sequentially in order of increasing energy steps. Some energy steps are omitted (usually because of data gaps) and the first data record written is not necessarily the first energy step.

Word No.	Item Description
1	Year (2 digits) [See Note 4]
2	Day of year (3 digits) [Jan. 1 = Day 1]
3	Millisecond of day
4	Energy step number
5 - end	16 groups of data [See Note 5]. Each group corresponds to 1 of 16 azimuthal sectors, and contains: Before 1983: 10 words which correspond to proton f(v) for detectors 2 - 6, and electron f(v) for detectors 2 - 6. 1983 onward: 12 words which correspond to proton f(v) for detectors 1 - 3, 5 - 7, and electron f(v) for detectors 1 - 3, 5 - 7.

Additional Notes:

Note 1: The time listed is always the start time of the cycle. See Note 3 below.

Note 2: Stepping sequence 3 corresponds to high-energy mode, in which energy steps 32 - 63 are sampled (see attached list for actual energy values.

Stepping sequence 4 corresponds to all-energy mode, in which energy steps 1 - 63 are sampled, but only odd-numbered steps are selected, i.e. steps 1, 3, 5.....63 (see attached list for actual energy values).

In stepping sequence 4 low-energy electron channels frequently respond to photoelectrons. The user should be aware of this, and delete those channels from subsequent calculations involving the ambient electron plasma properties.

Note 3: Mode 1 is low-bit-rate (LBR) mode. In this mode the LEPEDEA takes 16 seconds to sample all azimuthal angles at 1 energy.
The total instrument cycle time is 16 seconds x 32 energy channels = 512 seconds.

Mode 5 is high-bit-rate (HBR) mode. In this mode the LEPEDEA takes 4 seconds to sample all angles at 1 energy. The total instrument cycle time is 4 seconds x 32 energy channels = 128 seconds.

Note 4: The time listed is the start time for the energy step.

Note 5: The polar look directions (θ) of the seven detectors are shown in the attached figure (from Frank et al., 1978). The sixteen azimuthal angles (ϕ) are: 0°, 23°, 45°, 68°, 90°, 113°, 135°, 158°, 180°, 203°, 225°, 248°, 270°, 293°, 315° , 338° . The data are sorted so that they always correspond to these angles as listed. Please note that these are look directions of the instrument. To obtain the velocity directions the angles must be rotated by 180° in both θ and ϕ.

```
$  SET NOON
$ SET PROCESS/NAME=TESTREAD
$  SET ON
$!
$! AN ASCII OUTPUT OF ISEE ARCHIVING TAPE IS IN FILE TESTRD.OUT.
$! USER WILL BE ASKED FOR THE NAME OF TAPE DRIVE DEVICE AND THE YEAR
$! OF THE ARCHIVING DATA.
$! TO RUN THIS PROGRAM: TYPE @TESTREAD
$!
$ INQUIRE DEVICE "Please Enter Tape Device Name"
$ INQUIRE YEAR "Please Enter ISEE ARCHIVE Tape Year in 2 Digits"
$ OPEN/WRITE YEAR_FILE YEAR.DAT
$ WRITE YEAR_FILE YEAR
$ CLOSE YEAR_FILE
$ ASSIGN TESTRD.OUT FOR012
$ IF (YEAR .LT. 83)
$ THEN
$   MOUNT/FOREIGN/BLOCKSIZE=6560/RECORDSIZE=656  'DEVICE'
$ ELSE
$   MOUNT/FOREIGN/BLOCKSIZE=7840/RECORDSIZE=784  'DEVICE'
$ ENDIF
$ ASSIGN 'DEVICE' FOR010
$!
$ RUN TESTREAD
$ DEASSIGN FOR012
$ DEASSIGN FOR010
$ DELETE YEAR.DAT;*
$ WRITE SYS$OUTPUT ""
$ WRITE SYS$OUTPUT "End of the program TESTREAD."
$ EXIT
```

```
            PROGRAM ICARCHREAD
*********************************************************************
*                                                                   *
*       PROGRAM: ICARCHREAD                                         *
*       WRITTEN BY: FUCHIH CHEN,  MARCH, 1989                       *
*       PURPOSE: TO READ ISEE ARCHIVING TAPE TO OUTPUT FILE FOR012.DAT. *
*                                                                   *
*********************************************************************

        DIMENSION DV1(164)
        DIMENSION DV2(196)
        IREC = 20

        OPEN (UNIT=11,FORM='FORMATTED',STATUS='OLD',
     *        FILE='YEAR.DAT')
        READ (11,11)IYEAR
11      FORMAT(I2)
        CLOSE (11)
        IDENS = 6250
        NEOF = 2
        IF (IYEAR .LT. 83) THEN
          ISIZE = 164
          NBYTES =6560
        ELSE
          ISIZE = 196
          NBYTES =7840
        ENDIF
        OPEN (UNIT=10,BLOCKSIZE=NBYTES,FORM='UNFORMATTED',
     *        ORGANIZATION='SEQUENTIAL',RECL=ISIZE,
     *        RECORDTYPE='FIXED',STATUS='OLD',
     *        IOSTAT=ISTATOPEN,ERR=99)
        ITEMP = 0
20      IF (ITEMP .GT. IREC) GOTO 99
21      IF (IYEAR .LT. 83) THEN
           READ (10,END=100,IOSTAT=ISTATREAD,ERR=99) DV1
        ELSE
           READ (10,END=100,IOSTAT=ISTATREAD,ERR=99) DV2
        ENDIF
30      IF (IYEAR .LT. 83) THEN
          CALL PRINTREC(IYEAR,DV1)
        ELSE
          CALL PRINTREC(IYEAR,DV2)
        ENDIF
        ITEMP = ITEMP + 1
        GO TO 20
99      WRITE(6,101)ISTATOPEN, ISTATREAD, IYEAR
101     FORMAT(' ISTATOPEN=',I10,'   ISTATREAD=',I10,'   YEAR=',I4)
100     CLOSE (10)
        STOP
        END
```

```
              SUBROUTINE PRINTREC(IYEAR,DV)
************************************************************************
*                                                                      *
*       This subroutine will write the data in DV array to an output   *
*       file.                                                          *
*                                                                      *
************************************************************************

        DIMENSION DV(*)
        IF(DV(9) .LT. 0) THEN  !A HEADER RECORD
           IF (DV(9) .EQ. -111.) THEN
             WRITE(12,100) JINT(DV(1)),JINT(DV(2)),DV(3),JINT(DV(4)),
     *           JINT(DV(5)),DV(6),DV(7),DV(8)
100          FORMAT (/,1X,'CYCLE HEADER  YR-DOY-MSEC: ',2I5,
     *         F12.2,'  STEP SEQ:',I5,'  MODE:',I5,'  XSE-YSE-ZSE: ',
     *         3F12.2,/)
           ELSE
             WRITE(12,110)
110          FORMAT (/,1X,'DATA GAP, STEP CHANGED OR MODE CHANGED.',/)
           ENDIF
        ELSE   !A DATA RECORD
           IF (IYEAR .LT. 83) THEN
             WRITE(12,120)(DV(I),I=5,164)
120          FORMAT (/,1X,(1P5E12.2,/,5E12.2,/))
           ELSE
             WRITE(12,130)(DV(I),I=5,196)
130          FORMAT(/,1X,(1P6E12.2,/,6E12.2,/))
           ENDIF
           WRITE(12,140) JINT(DV(1)),JINT(DV(2)),DV(3),JINT(DV(4))
140        FORMAT(/,1X,'YY-DOY-MSEC: ',2I5,F12.2,'   ENERGY STEP:',
     *       I5,/)
        ENDIF
        RETURN
        END
```

SAMPLE OUTPUT FROM TESTREAD

CYCLE HEADER YR-DOY-MSEC: 78 287 29248.00 STEP SEQ: 3 MODE: 5 XSE-YSE-ZSE: 9.19 -6.41 4.69

9.81E-24	4.52E-23	6.14E-23	7.69E-23	5.54E-23
7.43E-31	1.10E-30	1.13E-30	2.68E-30	3.84E-31
6.31E-24	5.17E-23	1.52E-22	2.07E-22	9.68E-23
4.13E-31	7.92E-31	7.53E-31	1.94E-30	2.56E-31
5.15E-24	5.81E-23	1.73E-22	3.47E-22	1.11E-22
3.72E-31	7.23E-31	9.03E-31	1.78E-30	3.41E-31
3.98E-24	4.04E-23	1.05E-22	2.81E-22	1.04E-22
3.72E-31	7.23E-31	9.03E-31	1.53E-30	4.69E-31
3.01E-24	2.43E-23	4.34E-23	1.40E-22	5.88E-23
3.30E-31	5.51E-31	6.77E-31	1.32E-30	5.12E-31
2.23E-24	1.26E-23	1.81E-23	4.52E-23	2.51E-23
2.89E-31	4.13E-31	6.40E-31	1.28E-30	4.27E-31
1.46E-24	6.14E-24	8.23E-24	1.43E-23	1.00E-23
3.72E-31	3.44E-31	7.53E-31	1.36E-30	3.41E-31
1.46E-24	3.93E-24	3.04E-24	7.62E-24	5.72E-24
3.30E-31	3.44E-31	6.77E-31	1.36E-30	2.13E-31
9.71E-25	3.12E-24	2.14E-24	3.13E-24	4.21E-24
3.72E-31	4.13E-31	3.76E-31	1.28E-30	8.53E-32
5.83E-25	2.92E-24	1.80E-24	2.09E-24	3.45E-24
3.72E-31	3.79E-31	2.63E-31	1.94E-30	0.00E+00
5.83E-25	3.12E-24	2.03E-24	2.50E-24	2.81E-24
2.48E-31	2.75E-31	3.01E-31	3.35E-30	8.53E-32
1.26E-24	2.82E-24	2.37E-24	4.07E-24	1.40E-24
2.48E-31	2.75E-31	1.51E-31	3.35E-30	1.71E-31
1.36E-24	2.52E-24	2.82E-24	2.61E-24	2.16E-24
6.19E-31	5.51E-31	5.27E-31	2.60E-30	1.28E-31
3.01E-24	3.22E-24	3.61E-24	3.86E-24	4.64E-24
7.02E-31	5.51E-31	8.65E-31	3.68E-30	1.28E-31
4.56E-24	6.95E-24	8.23E-24	1.10E-23	1.05E-23
7.85E-31	6.54E-31	1.05E-30	4.17E-30	2.13E-31
6.31E-24	1.94E-23	2.27E-23	3.18E-23	2.51E-23
8.26E-31	8.60E-31	1.17E-30	3.84E-30	3.41E-31

YY-DOY-MSEC: 78 287 29248.00 ENERGY STEP: 38

2.48E-24	3.32E-23	6.24E-23	9.89E-23	3.70E-23
1.48E-31	1.98E-31	2.43E-31	1.39E-30	6.12E-32

SAMPLE OUTPUT

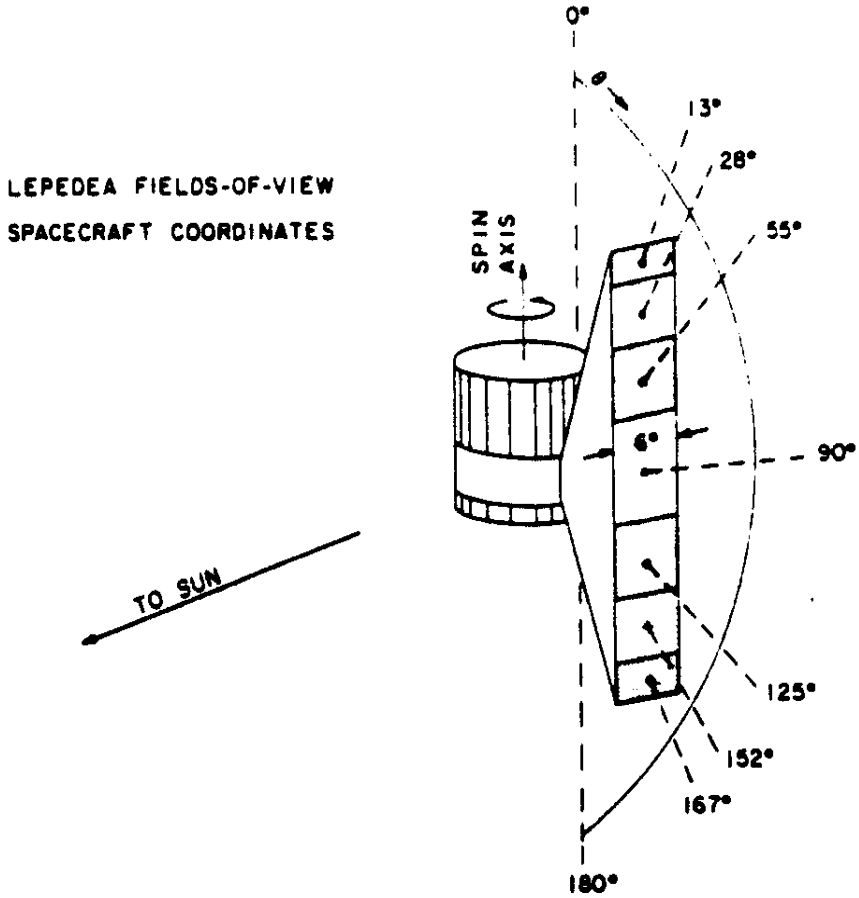

Fig. 3. Instrument fields-of-view as referenced to the spacecraft spin axis.

ISEE LEPEDEA INSTRUMENT

Step No.	ION PARAMETERS E_c^p	E_{MAX}^p	E_{MIN}^p	ΔE^p	X^p	v^p	f^p	ELECTRON PARAMETERS E_c^e	E_{MAX}^e	E_{MIN}^e	ΔE^e	X^e	v^e	f^e	
1	1.34+0	1.46+0	1.24+0	2.2-1	7.2+3	1.60+6	4.05-25	1.37+0	1.49+0	1.26+0	2.3-1	9.6+3	6.94+7	1.18-31	1
2	1.58+0	1.72+0	1.46+0	2.6-1	6.2+3	1.74+6	3.44-25	1.62+0	1.76+0	1.49+0	2.7-1	8.1+3	7.54+7	9.98-32	2
3	1.87+0	2.04+0	1.72+0	3.2-1	5.2+3	1.89+6	2.91-25	1.91+0	2.08+0	1.76+0	3.4-1	6.7+3	8.20+7	8.47-32	3
4	2.20+0	2.41+0	2.04+0	3.7-1	4.6+3	2.05+6	2.47-25	2.26+0	2.46+0	2.08+0	3.8-1	5.9+3	8.92+7	7.15-32	4
5	2.60+0	2.83+0	2.41+0	4.4-1	3.8+3	2.23+6	2.09-25	2.66+0	2.90+0	2.46+0	4.4-1	5.2+3	9.67+7	6.08-32	5
6	3.08+0	3.36+0	2.83+0	5.1-1	3.1+3	2.43+6	1.76-25	3.15+0	3.43+0	2.90+0	5.3-1	4.7+3	1.05+8	5.13-32	6
7	3.63+0	3.97+0	3.36+0	6.1-1	2.7+3	2.64+6	1.50-25	3.72+0	4.05+0	3.43+0	6.2-1	4.3+3	1.14+8	4.35-32	7
8	4.29+0	4.69+0	3.97+0	7.2-1	2.5+3	2.87+6	1.27-25	4.39+0	4.78+0	4.05+0	7.3-1	4.0+3	1.24+8	3.68-32	8
9	5.07+0	5.54+0	4.69+0	8.5-1	1.9+3	3.12+6	1.07-25	5.19+0	5.65+0	4.78+0	8.7-1	3.7+3	1.35+8	3.12-32	9
10	5.99+0	6.55+0	5.54+0	1.0+0	1.6+3	3.39+6	9.07-26	6.13+0	6.67+0	5.65+0	1.0+0	3.3+3	1.47+8	2.64-32	10
11	7.08+0	7.73+0	6.55+0	1.2+0	1.4+3	3.68+6	7.67-26	7.24+0	7.88+0	6.67+0	1.2+0	3.1+3	1.60+8	2.23-32	11
12	8.36+0	9.13+0	7.73+0	1.4+0	1.2+3	4.00+6	6.50-26	8.55+0	9.31+0	7.88+0	1.4+0	2.8+3	1.74+8	1.89-32	12
13	9.87+0	1.08+1	9.13+0	1.7+0	1.0+3	4.35+6	5.51-26	1.01+1	1.10+1	9.31+0	1.7+0	2.5+3	1.89+8	1.60-32	13
14	1.17+1	1.27+1	1.08+1	1.9+0	8.6+2	4.73+6	4.64-26	1.19+1	1.30+1	1.10+1	2.0+0	2.2+3	2.05+8	1.36-32	14
15	1.38+1	1.51+1	1.27+1	2.4+0	7.8+2	5.14+6	3.94-26	1.41+1	1.54+1	1.30+1	2.4+0	1.9+3	2.23+8	1.15-32	15
16	1.63+1	1.78+1	1.51+1	2.7+0	6.0+2	5.59+6	3.33-26	1.66+1	1.81+1	1.54+1	2.7+0	1.7+3	2.42+8	9.74-33	16
17	1.92+1	2.10+1	1.78+1	3.2+0	5.1+2	6.06+6	2.83-26	1.97+1	2.14+1	1.81+1	3.3+0	1.4+3	2.63+8	8.21-33	17
18	2.27+1	2.48+1	2.10+1	3.8+0	4.3+2	6.59+6	2.39-26	2.32+1	2.53+1	2.14+1	3.9+0	1.2+3	2.86+8	6.97-33	18
19	2.68+1	2.93+1	2.48+1	4.5+0	3.7+2	7.16+6	2.03-26	2.74+1	2.99+1	2.53+1	4.6+0	1.0+3	3.11+8	5.90-33	19
20	3.17+1	3.46+1	2.93+1	5.3+0	3.1+2	7.79+6	1.71-26	3.24+1	3.53+1	2.99+1	5.4+0	8.8+2	3.38+8	4.99-33	20
21	3.74+1	4.09+1	3.46+1	6.3+0	2.7+2	8.46+6	1.45-26	3.83+1	4.17+1	3.53+1	6.4+0	7.6+2	3.67+8	4.22-33	21
22	4.42+1	4.83+1	4.09+1	7.4+0	2.3+2	9.20+6	1.23-26	4.52+1	4.93+1	4.17+1	7.6+0	6.6+2	3.99+8	3.58-33	22
23	5.22+1	5.71+1	4.83+1	8.8+0	1.9+2	1.00+7	1.04-26	5.34+1	5.82+1	4.93+1	8.9+0	5.6+2	4.34+8	3.03-33	23
24	6.17+1	6.74+1	5.71+1	1.0+1	1.6+2	1.09+7	8.81-27	6.31+1	6.88+1	5.82+1	1.1+1	4.7+2	4.71+8	2.56-33	24
25	7.29+1	7.96+1	6.74+1	1.2+1	1.4+2	1.18+7	7.45-27	7.46+1	8.12+1	6.88+1	1.2+1	4.0+2	5.13+8	2.17-33	25
26	8.61+1	9.40+1	7.96+1	1.4+1	1.2+2	1.28+7	6.31-27	8.81+1	9.60+1	8.12+1	1.5+1	3.4+2	5.57+8	1.84-33	26
27	1.02+2	1.11+2	9.40+1	1.7+1	1.0+2	1.40+7	5.33-27	1.04+2	1.13+2	9.60+1	1.7+1	2.7+2	6.05+8	1.55-33	27
28	1.20+2	1.31+2	1.11+2	2.0+1	7.9+1	1.52+7	4.53-27	1.23+2	1.34+2	1.13+2	2.1+1	2.3+2	6.58+8	1.31-33	28
29	1.42+2	1.55+2	1.31+2	2.4+1	7.4+1	1.65+7	3.83-27	1.45+2	1.58+2	1.34+2	2.4+1	2.0+2	7.15+8	1.12-33	29
30	1.68+2	1.83+2	1.55+2	2.8+1	6.4+1	1.79+7	3.23-27	1.72+2	1.87+2	1.58+2	2.9+1	1.7+2	7.78+8	9.40-34	30
31	1.98+2	2.16+2	1.83+2	3.3+1	5.8+1	1.95+7	2.74-27	2.03+2	2.21+2	1.87+2	3.4+1	1.5+2	8.45+8	7.96-34	31
32	2.34+2	2.55+2	2.16+2	3.9+1	5.2+1	2.12+7	2.32-27	2.39+2	2.61+2	2.21+2	4.0+1	1.2+2	9.17+8	6.79-34	32
33	2.76+2	3.02+2	2.55+2	4.7+1	4.7+1	2.30+7	1.97-27	2.83+2	3.08+2	2.61+2	4.7+1	1.0+2	9.98+8	5.71-34	33
34	3.27+2	3.56+2	3.02+2	5.4+1	4.3+1	2.50+7	1.66-27	3.34+2	3.64+2	3.08+2	5.4+1	8.8+1	1.08+9	4.84-34	34
35	3.86+2	4.21+2	3.56+2	6.5+1	4.0+1	2.72+7	1.41-27	3.95+2	4.30+2	3.64+2	6.6+1	7.6+1	1.18+9	4.09-34	35
36	4.56+2	4.97+2	4.21+2	7.6+1	3.8+1	2.96+7	1.19-27	4.66+2	5.08+2	4.30+2	7.8+1	6.3+1	1.29+9	3.47-34	36
37	5.38+2	5.87+2	4.97+2	9.0+1	3.6+1	3.21+7	1.01-27	5.51+2	6.00+2	5.08+2	9.2+1	5.5+1	1.39+9	2.93-34	37
38	6.36+2	6.94+2	5.87+2	1.1+2	3.5+1	3.49+7	8.54-28	6.50+2	7.08+2	6.00+2	1.1+2	4.6+1	1.51+9	2.49-34	38
39	7.51+2	8.20+2	6.94+2	1.3+2	3.4+1	3.79+7	7.23-28	7.68+2	8.37+2	7.08+2	1.3+2	3.9+1	1.64+9	2.11-34	39
40	8.87+2	9.68+2	8.20+2	1.5+2	3.2+1	4.12+7	6.13-28	9.08+2	9.89+2	8.37+2	1.5+2	3.2+1	1.79+9	1.78-34	40
41	1.05+3	1.14+3	9.68+2	1.7+2	3.1+1	4.48+7	5.17-28	1.07+3	1.17+3	9.89+2	1.8+2	2.8+1	1.94+9	1.51-34	41
42	1.24+3	1.35+3	1.14+3	2.1+2	2.9+1	4.87+7	4.38-28	1.27+3	1.38+3	1.17+3	2.1+2	2.3+1	2.11+9	1.27-34	42
43	1.46+3	1.60+3	1.35+3	2.5+2	2.7+1	5.29+7	3.72-28	1.50+3	1.63+3	1.38+3	2.5+2	2.0+1	2.29+9	1.08-34	43
44	1.72+3	1.89+3	1.60+3	2.9+2	2.5+1	5.74+7	3.16-28	1.77+3	1.93+3	1.63+3	3.0+2	1.7+1	2.49+9	9.13-35	44
45	2.04+3	2.23+3	1.89+3	3.4+2	2.3+1	6.25+7	2.66-28	2.09+3	2.27+3	1.93+3	3.4+2	1.4+1	2.71+9	7.76-35	45
46	2.41+3	2.63+3	2.23+3	4.0+2	2.1+1	6.79+7	2.25-28	2.47+3	2.69+3	2.27+3	4.2+2	1.2+1	2.94+9	6.55-35	46
47	2.85+3	3.11+3	2.63+3	4.8+2	1.7+1	7.39+7	1.91-28	2.91+3	3.17+3	2.69+3	4.8+2	1.1+1	3.19+9	5.56-35	47
48	3.38+3	3.67+3	3.11+3	5.6+2	1.6+1	8.02+7	1.62-28	3.44+3	3.75+3	3.17+3	5.8+2	9.4+0	3.46+9	4.70-35	48
49	3.97+3	4.33+3	3.67+3	6.6+2	1.4+1	8.72+7	1.37-28	4.07+3	4.43+3	3.75+3	6.8+2	8.5+0	3.76+9	3.97-35	49
50	4.69+3	5.12+3	4.33+3	7.9+2	1.2+1	9.48+7	1.16-28	4.80+3	5.23+3	4.43+3	8.0+2	7.6+0	4.08+9	3.37-35	50
51	5.55+3	6.05+3	5.12+3	9.3+2	1.1+1	1.03+8	9.79-29	5.68+3	6.18+3	5.23+3	9.5+2	6.7+0	4.44+9	2.85-35	51
52	6.55+3	7.14+3	6.05+3	1.1+3	9.6+0	1.12+8	8.30-29	6.70+3	7.30+3	6.18+3	1.1+3	6.0+0	4.81+9	2.41-35	52
53	7.74+3	8.44+3	7.14+3	1.3+3	8.4+0	1.22+8	7.02-29	7.92+3	8.62+3	7.30+3	1.3+3	5.4+0	5.22+9	2.04-35	53
54	9.14+3	9.97+3	8.44+3	1.5+3	7.2+0	1.32+8	5.94-29	9.36+3	1.02+4	8.62+3	1.6+3	4.9+0	5.66+9	1.73-35	54
55	1.08+4	1.18+4	9.97+3	1.8+3	6.2+0	1.44+8	5.03-29	1.11+4	1.20+4	1.02+4	1.8+3	4.3+0	6.15+9	1.46-35	55
56	1.28+4	1.39+4	1.18+4	2.1+3	5.5+0	1.57+8	4.24-29	1.31+4	1.42+4	1.20+4	2.2+3	3.9+0	6.67+9	1.23-35	56
57	1.51+4	1.64+4	1.39+4	2.5+3	4.8+0	1.70+8	3.60-29	1.54+4	1.68+4	1.42+4	2.6+3	3.5+0	7.20+9	1.05-35	57
58	1.78+4	1.94+4	1.64+4	3.0+3	4.0+0	1.85+8	3.05-29	1.82+4	1.98+4	1.68+4	3.0+3	3.2+0	7.80+9	8.88-36	58
59	2.10+4	2.29+4	1.94+4	3.5+3	3.5+0	2.01+8	2.59-29	2.15+4	2.34+4	1.98+4	3.6+3	2.9+0	8.44+9	7.52-36	59
60	2.48+4	2.71+4	2.29+4	4.2+3	3.1+0	2.18+8	2.19-29	2.54+4	2.77+4	2.34+4	4.3+3	2.6+0	9.12+9	6.37-36	60
61	2.93+4	3.20+4	2.71+4	4.9+3	2.7+0	2.37+8	1.85-29	3.00+4	3.27+4	2.77+4	5.0+3	2.3+0	9.85+9	5.39-36	61
62	3.47+4	3.78+4	3.20+4	5.8+3	2.3+0	2.58+8	1.57-29	3.55+4	3.86+4	3.27+4	5.9+3	2.1+0	1.06+10	4.55-36	62
63	4.09+4	4.46+4	3.78+4	6.8+3	1.9+0	2.80+8	1.33-29	4.19+4	4.56+4	3.86+4	7.0+3	1.8+0	1.15+10	3.86-36	63

Units are eV for energies, cm/sec for velocities, $(cm^2\text{-}sr\text{-}eV)^{-1}$ for X.
energy resolution, $\Delta E/E = 0.16$; analyzer constant = 17 eV/1 volt on plates.
j (differential flux) = X R in units of $(cm^2\text{-}sr\text{-}eV)^{-1}$ where R = counts/sec.
f(v) or n (phase space density) = F j in units of $cm^{-6}s^3$.

D-87922
06/17/80 - 06/29/80

RECORD 1 OF FILE 1
LENGTH = 6560 BYTES

Yr. 80 Day 169

A0430000	29440000	F54800F3	40410000	80400000	7240BFBC	6242B102	34411268	DEC30000	DEC30000	Start Time
DEC30000	DEC30000	DEC30000	DEC30000	DEC30000	DEC30000	DEC30000	DEC30000	DEC30000	DEC30000	
DEC30000	DEC30000	DEC30000	DEC30000	DEC30000	DEC30000	DEC30000	DEC30000	DEC30000	DEC30000	
DEC30000	DEC30000	DEC30000	DEC30000	DEC30000	DEC30000	DEC30000	DEC30000	DEC30000	DEC30000	
DEC30000	DEC30000	DEC30000	DEC30000	DEC30000	DEC30000	DEC30000	DEC30000	DEC30000	DEC30000	
DEC30000	DEC30000	DEC30000	DEC30000	DEC30000	DEC30000	DEC30000	DEC30000	DEC30000	DEC30000	
DEC30000	DEC30000	DEC30000	DEC30000	DEC30000	DEC30000	DEC30000	DEC30000	DEC30000	DEC30000	
DEC30000	DEC30000	DEC30000	DEC30000	DEC30000	DEC30000	DEC30000	DEC30000	DEC30000	DEC30000	
DEC30000	DEC30000	DEC30000	DEC30000	DEC30000	DEC30000	DEC30000	DEC30000	DEC30000	DEC30000	
DEC30000	DEC30000	DEC30000	DEC30000	DEC30000	DEC30000	DEC30000	DEC30000	DEC30000	DEC30000	
DEC30000	DEC30000	DEC30000	DEC30000	DEC30000	DEC30000	DEC30000	DEC30000	DEC30000	DEC30000	
DEC30000	DEC30000	DEC30000	DEC30000	DEC30000	DEC30000	DEC30000	DEC30000	DEC30000	DEC30000	
DEC30000	DEC30000	DEC30000	DEC30000	DEC30000	DEC30000	DEC30000	DEC30000	DEC30000	DEC30000	
DEC30000	DEC30000	DEC30000	DEC30000	DEC30000	DEC30000	DEC30000	DEC30000	DEC30000	DEC30000	
DEC30000	DEC30000	DEC30000	DEC30000	A0430000	29440000	F54800F3	28430000	00000000	2817247A	
00000000	00000000	511755F9	00000000	180DA668	00000000	00000000	7A0C7045	00000000	00000000	
00000000	00000000	00000000	6E0DDDA3	180DA668	880DA25D	160D4667	FA0C7045	511755F9	00000000	
CC17152A	00000000	00000000	6E0DDDA3	980CA668	00000000	00000000	7A0C7045	511755F9	2817247A	
00000000	00000000	511755F9	880CA25D	00000000	080DA25D	00000000	7A0C7045	00000000	00000000	
00000000	7C17FB4C	00000000	080CA25D	E40CFA9C	00000000	00000000	1C0D676B	D11755F9	2817247A	HEXDUMP OF
4C18152A	00000000	511755F9	CC0C758C	980CA668	080DA25D	00000000	FA0B7045	00000000	2817247A	
CC17152A	00000000	D11755F9	880CA25D	980CA668	080DA25D	160D4667	7A0C7045	1D18007B	00000000	
00000000	7C17FB4C	00000000	080DA25D	180DA668	880DA25D	00000000	FA0B7045	00000000	2817247A	C-29409
CC17152A	00000000	00000000	880CA25D	980CA668	00000000	00000000	7A0C7045	511755F9	00000000	
00000000	00000000	00000000	080DA25D	980CA668	080DA25D	160D4667	BB0C15B4	00000000	00000000	
CC17152A	00000000	511755F9	CC0C758C	3E0DCF82	080DA25D	00000000	FA0B7045	00000000	A817247A	
CC17152A	00000000	00000000	880CA25D	E40CFA9C	00000000	00000000	7A0C7045	00000000	2817247A	
00000000	00000000	D11755F9	880CA25D	980CA668	080DA25D	00000000	7A0C7045	00000000	00000000	
CC17152A	7C17FB4C	00000000	080CA25D	180CA668	080DA25D	00000000	7A0C7045	00000000	2817247A	
00000000	00000000	00000000	080CA25D	180CA668	00000000	00000000	FA0C7045	511755F9	2817247A	
00000000	00000000	00000000	00000000	980CA668	080DA25D	160D4667	FA0B7045	A0430000	29440000	
0A49C097	2C430000	00000000	00000000	A117F870	00000000	2617FE08	480C2BCB	E00C9A6A	00000000	
00000000	8A0C7A31	2617FE08	0517CC38	A117F870	00000000	00000000	C80B2BCB	A80CF34F	00000000	
DD0CAC76	380DF841	2617FE08	8517CC38	00000000	00000000	2617FE08	960C6198	E00C9A6A	480D2BCB	
5D0DAC76	380CF841	00000000	00000000	00000000	00000000	2617FE08	480C2BCB	E00C9A6A	00000000	
DD0CAC76	B80BF841	2617FE08	0517CC38	A117F870	47173281	2617FE08	160D6198	A80CF34F	960D6198	
00000000	B80BF841	00000000	00000000	00000000	00000000	2617FE08	960C6198	E00B9A6A	00000000	
DD0CAC76	8A0C7A31	00000000	00000000	00000000	47173281	00000000	160D6198	600C9A6A	C80C2BCB	
00000000	B80CF841	00000000	00000000	00000000	00000000	2617FE08	480C2BCB	600C9A6A	C80C2BCB	
DD0CAC76	8A0C7A31	F9177C0D	0517CC38	00000000	47173281	00000000	480C2BCB	0C0DA042	C80C2BCB	
DD0CAC76	0A0D7A31	00000000	0517CC38	00000000	00000000	00000000	00000000	00000000	00000000	
5D0DAC76	B80BF841	00000000	00000000	A117F870	00000000	00000000	480C2BCB	E00B9A6A	480D2BCB	
00000000	B80BF841	2617FE08	00000000	A117F870	47173281	2617FE08	FA0CF6FD	280DF34F	00000000	
DD0CAC76	B80BF841	00000000	0517CC38	00000000	C7173281	2617FE08	00000000	0C0DA042	00000000	
DD0CAC76	B80BF841	00000000	00000000	00000000	47173281	2617FE08	160D6198	E00B9A6A	C80C2BCB	
00000000	8A0C7A31	00000000	8517CC38	00000000	47173281	2617FE08	160D6198	E00C9A6A	00000000	
DD0CAC76	B80CF841	2617FE08	00000000	A117F870	00000000	2617FE08	960C6198	A80CF34F	00000000	
00000000	380CF841	A0430000	29440000	1A49C035	30430000	02173E7F	9D17880F	00000000	00000000	
82173E7F	00000000	A10CE9A7	00000000	1F0D6187	470C8C17	00000000	00000000	00000000	1C1782CD	
00000000	340DA4CC	720CDD7B	900CB5A3	00000000	840C5DBA	00000000	D1160B6A	7D17DCC5	1C1782CD	

RECORD 8309 OF FILE 1
LENGTH = 2624 BYTES

Yr. 80 Day 181

A0430000	35440000	6B4BC441	1C430000	4B181B3C	A318DF11	4518999C	D5197EAD	4B181B3C	BF0C742F	Stop Time
00000000	00000000	00000000	00000000	CB171B3C	CB1857D6	4518999C	55197EAD	4B181B3C	00000000	
D50C80AD	00000000	00000000	00000000	00000000	2318DF11	00000000	00000000	00000000	BF0C742F	
00000000	00000000	00000000	00000000	00000000	A317DF11	00000000	00000000	00000000	00000000	
00000000	00000000	00000000	00000000	00000000	00000000	00000000	00000000	00000000	00000000	
00000000	00000000	00000000	00000000	00000000	00000000	00000000	00000000	00000000	00000000	
00000000	00000000	00000000	00000000	00000000	00000000	00000000	00000000	00000000	00000000	
00000000	00000000	00000000	00000000	00000000	00000000	00000000	00000000	00000000	00000000	
00000000	00000000	00000000	00000000	00000000	00000000	00000000	00000000	00000000	00000000	
00000000	00000000	00000000	00000000	00000000	00000000	00000000	00000000	00000000	00000000	
00000000	00000000	00000000	00000000	CB171B3C	00000000	00000000	00000000	00000000	00000000	
00000000	00000000	00000000	00000000	CB171B3C	2318DF11	4518999C	00000000	00000000	00000000	
00000000	00000000	00000000	00000000	CB171B3C	F418D09A	00000000	00000000	00000000	00000000	
00000000	00000000	00000000	00000000	4B181B3C	2318DF11	C518999C	B718FE26	4B181B3C	00000000	
00000000	00000000	00000000	00000000	CB171B3C	A317DF11	00000000	B718FE26	9818156D	00000000	
00000000	00000000	00000000	00000000	00000000	00000000	00000000	3719FE26	A519D720	00000000	
00000000	00000000	00000000	00000000	A0430000	35440000	6C4BA83B	20430000	721873ED	6F1A3D96	
D819B985	9118D4F2	00000000	00000000	00000000	00000000	00000000	00000000	A118A0F3	011907F2	
4419A8D6	9118D4F2	00000000	840CDAAE	00000000	00000000	00000000	00000000	00000000	42180DEB	
1D188678	00000000	00000000	00000000	00000000	00000000	00000000	00000000	00000000	00000000	
00000000	00000000	00000000	00000000	00000000	00000000	00000000	00000000	00000000	00000000	
00000000	00000000	00000000	00000000	00000000	00000000	00000000	00000000	00000000	00000000	
00000000	00000000	00000000	00000000	00000000	00000000	00000000	00000000	00000000	00000000	
00000000	00000000	00000000	00000000	940CF44A	00000000	00000000	00000000	00000000	00000000	
00000000	00000000	00000000	840CDAAE	00000000	00000000	00000000	00000000	00000000	00000000	
00000000	00000000	00000000	00000000	00000000	00000000	00000000	00000000	00000000	00000000	
00000000	00000000	00000000	00000000	00000000	00000000	00000000	00000000	00000000	00000000	
00000000	00000000	00000000	00000000	00000000	00000000	00000000	00000000	2118A0F3	00000000	
1D188678	00000000	00000000	00000000	00000000	00000000	00000000	00000000	721873ED	011807F2	
1D188678	42181B99	00000000	00000000	00000000	00000000	00000000	00000000	2118A0F3	811707F2	
9D188678	42181B99	A117A0F3	00000000	00000000	00000000	00000000	00000000	00000000	00000000	
EC19CB34	F318613F	00000000	00000000	00000000	00000000	00000000	730C2B83	A117A0F3	AC1A7195	
1D188678	42191B99	00000000	00000000	00000000	00000000	00000000	00000000	79C500C0	79C500C0	
79C500C0	79C500C0	79C500C0	79C500C0	79C500C0	79C500C0	79C500C0	79C500C0	79C500C0	79C500C0	
79C500C0	79C500C0	79C500C0	79C500C0	79C500C0	79C500C0	79C500C0	79C500C0	79C500C0	79C500C0	
79C500C0	79C500C0	79C500C0	79C500C0	79C500C0	79C500C0	79C500C0	79C500C0	79C500C0	79C500C0	
79C500C0	79C500C0	79C500C0	79C500C0	79C500C0	79C500C0	79C500C0	79C500C0	79C500C0	79C500C0	
79C500C0	79C500C0	79C500C0	79C500C0	79C500C0	79C500C0	79C500C0	79C500C0	79C500C0	79C500C0	
79C500C0	79C500C0	79C500C0	79C500C0	79C500C0	79C500C0	79C500C0	79C500C0	79C500C0	79C500C0	
79C500C0	79C500C0	79C500C0	79C500C0	79C500C0	79C500C0	79C500C0	79C500C0	79C500C0	79C500C0	
79C500C0	79C500C0	79C500C0	79C500C0	79C500C0	79C500C0	79C500C0	79C500C0	79C500C0	79C500C0	
79C500C0	79C500C0	79C500C0	79C500C0	79C500C0	79C500C0	79C500C0	79C500C0	79C500C0	79C500C0	
79C500C0	79C500C0	79C500C0	79C500C0	79C500C0	79C500C0	79C500C0	79C500C0	79C500C0	79C500C0	
79C500C0	79C500C0	79C500C0	79C500C0	79C500C0	79C500C0	79C500C0	79C500C0	79C500C0	79C500C0	
79C500C0	79C500C0	79C500C0	79C500C0	79C500C0	79C500C0	79C500C0	79C500C0	79C500C0	79C500C0	
79C500C0	79C500C0	79C500C0	79C500C0	79C500C0	79C500C0	79C500C0	79C500C0	79C500C0	79C500C0	
79C500C0	79C500C0	A0430000	38440000	E24BB41D	40410000	80400000	4EBF8D53	B0424DD9	C43FA092	
DEC30000	DEC30000	DEC30000	DEC30000	DEC30000	DEC30000	DEC30000	DEC30000	DEC30000	DEC30000	
DEC30000	DEC30000	DEC30000	DEC30000	DEC30000	DEC30000	DEC30000	DEC30000	DEC30000	DEC30000	

DEC30000	DEC30000	DEC30000	DEC30000	DEC30000	DEC30000	DEC30000	DEC30000	DEC30000	DEC30000
DEC30000	DEC30000	DEC30000	DEC30000	DEC30000	DEC30000	DEC30000	DEC30000	DEC30000	DEC30000
DEC30000	DEC30000	DEC30000	DEC30000	DEC30000	DEC30000	DEC30000	DEC30000	DEC30000	DEC30000
DEC30000	DEC30000	DEC30000	DEC30000	DEC30000	DEC30000	DEC30000	DEC30000	DEC30000	DEC30000
DEC30000	DEC30000	DEC30000	DEC30000	DEC30000	DEC30000	DEC30000	DEC30000	DEC30000	DEC30000
DEC30000	DEC30000	DEC30000	DEC30000	DEC30000	DEC30000	DEC30000	DEC30000	DEC30000	DEC30000
DEC30000	DEC30000	DEC30000	DEC30000	DEC30000	DEC30000	DEC30000	DEC30000	DEC30000	DEC30000
DEC30000	DEC30000	DEC30000	DEC30000	DEC30000	DEC30000	DEC30000	DEC30000	DEC30000	DEC30000
DEC30000	DEC30000	DEC30000	DEC30000	DEC30000	DEC30000	DEC30000	DEC30000	DEC30000	DEC30000
DEC30000	DEC30000	DEC30000	DEC30000	DEC30000	DEC30000	DEC30000	DEC30000	DEC30000	DEC30000
DEC30000	DEC30000	DEC30000	DEC30000	DEC30000	DEC30000	DEC30000	DEC30000	DEC30000	DEC30000
DEC30000	DEC30000	DEC30000	DEC30000	DEC30000	DEC30000	DEC30000	DEC30000	DEC30000	DEC30000
DEC30000	DEC30000	DEC30000	DEC30000	DEC30000	DEC30000				

8309 RECORDS IN FILE 1 OF TAPE

0 RECORDS IN FILE 2 OF TAPE

1ST RECORD OF
D-79640

FILE 1 RECORD 1 32768 BYTES

```
0089 771030  14157.0  35557.0  5.8983E+00  4.4001E+02 -2.3133E+00  1.5247E-01  1.0174E+050027 3.6686E+05  7.1104E-020089 771030  142
06.0  35646.0  6.7653E+00  3.5306E+02 -2.6616E+00 -9.1330E+00  2.7225E+050027 5.4985E+05  0.0000E+000089 771030  14254.0  35734.0  1
.0128E+01  3.9360E+02  1.6266E+01  6.1878E-01  2.0082E+050027 5.1891E+05  0.0000E+000089 771030  14303.0  35823.0  7.5370E+00  3.816
0E+02  4.7102E+00  1.0105E-01  1.4862E+050027 3.0551E+05  4.0966E-020089 771030  14352.0  35912.0  8.2415E+00  4.3298E+02  1.7180E+0
0 -1.9851E+00  9.9169E+040027 2.0530E+05  4.4581E-020089 771030  14400.0  40000.0  1.4547E+01  4.2747E+02 -2.0509E+00 -1.2732E+00  1
.1490E+050027 1.6301E+05  0.0000E+000089 771030  14449.0  40049.0  5.5504E+00  4.1908E+02  1.0272E+01  1.0591E+00  6.5184E+040027 5.
1876E+05  0.0000E+000089 771030  14497.0  40137.0  1.1181E+01  4.0822E+02 -1.4232E+00 -2.0233E+00  1.6498E+050027 2.3551E+05  4.7617
E-020089 771030  14595.0  40315.0  9.0085E+00  4.2413E+02  7.8200E-01  1.0083E+00  1.1721E+050027 1.1952E+05  3.6339E-020089 771030
 14643.0  40403.0  6.6990E+00  4.3400E+02 -8.0917E-01 -2.3000E+00  1.1262E+050027 1.6056E+05  3.8647E-020089 771030  14692.0  40452.
0  1.2284E+01  4.0132E+02  7.9412E+00  2.1457E+00  1.1053E+050027 1.4086E+05  2.9715E-020089 771030  14741.0  40541.0  7.3939E+00  4
.2710E+02 -1.6152E+00 -2.2809E-01  7.8743E+040027 1.3470E+05  5.8079E-020089 771030  14790.0  40630.0  6.6945E+00  4.2329E+02 -1.316
1E+00 -1.1804E+00  1.1763E+050027 1.4183E+05  7.1470E-020089 771030  14960.0  40920.0  7.0403E+00  4.2455E+02 -6.8639E-01 -3.3230E+0
0  1.0618E+050027 2.0700E+05  4.7684E-020089 771030  15006.0  41008.0  7.5568E+00  4.1850E+02 -4.3955E+00  2.1481E+00  1.3017E+05002
7 1.3993E+05  5.1954E-020089 771030  15057.0  41057.0  9.5809E+00  4.3501E+02  2.4182E+00  1.6909E+00  1.1094E+050027 1.6464E+05  5.
1520E-020089 771030  15106.0  41146.0  9.0401E+00  4.3269E+02 -4.0106E-01 -4.9484E-02  1.2960E+050027 1.8498E+05  5.7590E-020089 771
030  15154.0  41234.0  9.2637E+00  4.4006E+02  4.9591E+00 -1.6560E+00  1.1630E+050027 2.1174E+05  5.8220E-020089 771030  15203.0  41
323.0  9.9123E+00  4.3365E+02  2.1870E+00  9.6645E-01  9.6887E+040027 3.4605E+05  8.0162E-020089 771030  15252.0  41412.0  8.9288E+0
0  4.5138E+02  5.7947E-01 -3.8557E+00  9.8667E+040027 2.0439E+05  0.0000E+000089 771030  15300.0  41500.0  9.3997E+00  4.3746E+02  2
.3742E+00  5.8353E-01  8.3321E+040027 2.6967E+05  4.3606E-020089 771030  15349.0  41549.0  1.0214E+01  4.2882E+02 -4.6418E-02  2.394
4E+00  9.8677E+040027 1.5106E+05  4.9726E-020089 771030  15398.0  41638.0  1.0085E+01  4.1875E+02  2.3080E-01  1.4808E+00  1.2477E+0
050027 3.8350E+05  4.2532E-020089 771030  15446.0  41726.0  1.0035E+01  4.1259E+02 -4.4473E+00 -6.9223E+00  9.9757E+040027 1.4105E+05
  7.1342E-020089 771030  15495.0  41815.0  7.0366E+00  4.3375E+02 -7.5623E-02 -2.6076E+00  7.6412E+040027 1.4275E+05  0.0000E+000089
 771030  15543.0  41903.0  1.0240E+01  4.3698E+02 -1.2645E+00 -1.6736E+00  1.0855E+050027 1.2299E+05  5.1381E-020089 771030  15592.0
  41952.0  7.2617E+00  4.3534E+02 -3.7986E-01  1.4615E+00  6.8468E+040027 1.2797E+05  6.3525E-020089 771030  15641.0  42041.0  5.872
1E+00  4.4230E+02 -4.3564E+00 -2.5280E+00  6.7425E+040027 1.2606E+05  5.9698E-020089 771030  15690.0  42130.0  8.0710E+00  4.0799E+0
2  5.4345E+00 -2.6298E+00  1.2605E+050027 1.6001E+05  0.0000E+000089 771030  15736.0  42218.0  5.5568E+00  4.2508E+02  6.8577E-01  2
.2280E+00  7.4331E+040027 2.8596E+05  0.0000E+000089 771030  15787.0  42307.0  8.0712E+00  4.1050E+02  1.7371E-01 -5.2967E+00  1.184
3E+050027 1.6040E+05  0.0000E+000089 771030  15836.0  42356.0  6.3465E+00  4.2117E+02  3.0757E+00  6.6532E-01  9.7935E+040027 9.6016
E+04  5.7454E-020089 771030  15884.0  42444.0  1.1462E+01  4.2641E+02  2.1313E+00  2.4328E+00  1.1343E+050027 1.6795E+05  4.2067E-02
0089 771030  15933.0  42533.0  1.0165E+01  4.4432E+02  9.3150E-01  1.6728E+00  8.1680E+040027 1.4033E+05  0.0000E+000089 771030  159
81.0  42621.0  5.1129E+00  4.3616E+02 -9.1839E-01 -2.3175E+00  9.2000E+040027 2.1766E+05  6.8076E-020089 771030  16030.0  42710.0  9
.2919E+00  4.2761E+02 -1.9369E+00 -4.9195E+00  9.4669E+040027 1.6218E+05  0.0000E+000089 771030  16079.0  42759.0  8.0351E+00  4.354
1E+02  2.8001E+00 -4.9279E-01  1.0038E+050027 2.7273E+05  6.8600E-020089 771030  16127.0  42847.0  8.1649E+00  4.4902E+02  7.8658E-0
1 -1.8426E+00  9.1650E+040027 1.8213E+05  4.8329E-020089 771030  16176.0  42936.0  7.7580E+00  4.3363E+02  1.4009E+00  6.6738E-01  9
.2561E+040027 1.2830E+05  4.8910E-020089 771030  16225.0  43025.0  7.6709E+00  4.4277E+02 -3.4199E+00 -2.4770E+00  9.1809E+040027 1.
4969E+05  5.6355E-020089 771030  16273.0  43113.0  6.8775E+00  4.4515E+02 -1.4087E+00 -3.2829E+00  9.3762E+040027 1.3416E+05  5.6509
E-020089 771030  16322.0  43202.0  5.0926E+00  4.3008E+02  9.4347E-01 -3.9452E+00  1.2453E+050027 1.0614E+05  5.6236E-020089 771030
 16371.0  43251.0  7.8548E+00  4.2390E+02 -6.1433E-01 -4.1311E+00  9.5645E+040027 1.3806E+05  5.3989E-020089 771030  16419.0  43339.
0  6.6122E+00  4.3925E+02 -3.9469E+00 -6.7247E+00  6.6382E+040027 1.2153E+05  5.7730E-020089 771030  16468.0  43428.0  5.3231E+00  4
.1979E+02 -1.5682E+00  5.6516E-01  7.3759E+040027 1.3715E+05  4.2605E-020089 771030  16516.0  43516.0  7.6417E+00  4.4270E+02  2.863
3E+00 -7.4106E+00  1.0609E+050027 3.1331E+05  0.0000E+000089 771030  16565.0  43605.0  9.3061E+00  4.3242E+02 -5.3579E+00 -3.2756E-0
1  8.3692E+040027 1.6483E+05  4.2591E-020089 771030  16614.0  43654.0  1.0079E+01  4.2460E+02 -6.3139E-01 -1.4451E+00  7.5686E+04002
7 1.5275E+05  4.5722E-020089 771030  16663.0  43743.0  1.3713E+01  4.2215E+02 -6.1041E-01 -2.5197E+00  1.2115E+050027 3.1316E+05  0.
0000E+000089 771030  16711.0  43831.0  6.3653E+00  4.3215E+02  1.6246E+00 -6.3184E+00  7.7840E+040027 2.8150E+05  0.0000E+000089 771
030  16760.0  43920.0  7.6705E+00  4.1890E+02 -1.7855E+00 -6.4844E+00  8.5527E+040027 2.1701E+05  0.0000E+000089 771030  16809.0  44
009.0  9.9886E+00  3.9304E+02 -4.5834E+00 -3.9585E+00  7.9674E+040027 7.2575E+04  0.0000E+000089 771030  16857.0  44057.0  6.1183E+0
0  3.6097E+02 -1.6434E+00  2.5859E+00  7.3452E+040027 1.2208E+05  4.9684E-020089 771030  16906.0  44146.0  9.8373E+00  4.2108E+02 -2
.1759E+00 -3.4193E+00  9.0391E+040027 1.4316E+05  5.8014E-020089 771030  16955.0  44235.0  7.3159E+00  4.3393E+02 -9.7443E-01 -3.778
8E+00  1.3110E+050027 3.3201E+05  7.1449E-020089 771030  17003.0  44323.0  7.2596E+00  4.2364E+02 -2.9591E+00 -3.1454E+00  7.2965E+0
40027 1.8157E+05  0.0000E+000089 771030  17052.0  44412.0  1.2694E+01  3.8614E+02  1.2985E+00 -6.3823E+00  1.2298E+050027 2.3446E+05
  5.5327E-020089 771030  17100.0  44500.0  6.6579E+00  4.2659E+02  9.0075E-01 -1.0018E+00  1.4152E+050027 1.7176E+05  5.5722E-020089
 771030  17149.0  44549.0  9.7054E+00  4.1848E+02 -6.0761E-01 -1.7893E+00  1.0138E+050027 1.4085E+05  5.3130E-020089 771030  17198.0
  44638.0  7.1175E+00  4.0550E+02 -1.7365E+00 -3.1269E+00  1.0022E+050027 2.2996E+05  0.0000E+000089 771030  17246.0  44726.0  8.666
6E+00  4.2516E+02  4.2134E-01  1.6825E+00  9.7415E+040027 2.1786E+05  0.0000E+000089 771030  17295.0  44815.0  1.1542E+01  4.1363E+0
2 -1.2125E+00 -2.6627E+00  9.2580E+040027 2.4004E+05  2.9263E-020089 771030  17368.0  44928.0  9.6586E+00  4.0587E+02  1.2632E+00 -2
.1336E+00  1.3011E+050027 1.5202E+05  0.0000E+000089 771030  17417.0  45017.0  6.1746E+00  4.1716E+02  2.2043E+00  1.2827E+00  9.780
2E+040027 2.7176E+05  4.8642E-020089 771030  17465.0  45105.0  6.2230E+00  4.0086E+02 -1.3624E+00 -4.5554E+00  1.1322E+050027 1.9577
E+05  0.0000E+000089 771030  17514.0  45154.0  6.8151E+00  4.0519E+02 -2.0860E+00 -1.7494E+00  8.9034E+040027 1.6027E+05  6.0506E-02
```

0089 771030 17563.0 45243.0 5.6755E+00 3.9776E+02 -3.7193E+00 -3.3525E+00 8.2323E+040027 1.9619E+05 0.0000E+000089 771030 176
11.0 45331.0 1.1224E+01 4.1097E+02 -3.5668E+00 -3.3895E+00 1.2236E+050027 1.5016E+05 3.6457E-020089 771030 17660.0 45420.0 8
.4079E+00 3.9829E+02 -2.0448E+00 -3.3976E+00 1.3114E+050027 1.5670E+05 4.7439E-020089 771030 17709.0 45509.0 9.5908E+00 4.151
5E+02 5.6644E+00 2.1959E-01 1.0800E+050027 1.4165E+05 5.2906E-020089 771030 17757.0 45557.0 6.0886E+00 3.9206E+02 6.2351E+0
0 -5.9323E+00 1.1279E+050027 1.3576E+05 0.0000E+000089 771030 17806.0 45646.0 8.5527E+00 4.2292E+02 1.7278E+00 -1.1006E+00 7
.0847E+040027 9.2883E+04 5.1030E-020089 771030 17855.0 45735.0 8.8156E+00 4.0396E+02 -3.0361E+00 -4.0209E+00 8.9451E+040027 1.
3223E+05 7.5196E-020089 771030 17905.0 45823.0 9.1015E+00 4.2262E+02 1.2353E+00 -4.7959E+00 9.6535E+040027 1.3704E+05 0.0000
E+000089 771030 17952.0 45912.0 5.9477E+00 4.2419E+02 -2.2272E+00 -3.4825E+00 8.6025E+040027 1.1729E+05 3.9792E-020089 771030
18001.0 50001.0 1.2974E+01 4.1628E+02 -1.9573E+00 -2.7382E+00 1.0306E+050027 1.7687E+05 3.0825E-020089 771030 18098.0 50138.
0 5.8868E+00 4.1797E+02 -2.4786E+00 -1.9513E+00 7.7041E+040027 2.0453E+05 0.0000E+000089 771030 18146.0 50226.0 7.9073E+00 4
.1007E+02 -3.4631E+00 -2.7405E+00 6.8465E+040027 2.3815E+05 3.1589E-020089 771030 18195.0 50315.0 7.1502E+00 4.1419E+02 -4.111
9E+00 -9.4220E-01 1.1062E+050027 1.4956E+05 4.8352E-020089 771030 18244.0 50404.0 8.2746E+00 4.1379E+02 -3.6854E+00 -1.3376E+0
0 1.1322E+050027 1.4751E+05 4.5268E-020089 771030 18292.0 50452.0 7.6474E+00 4.1717E+02 -3.3849E+00 -2.5542E+00 9.5557E+04002
7 1.5583E+05 8.3605E-020089 771030 18341.0 50541.0 7.7474E+00 4.1450E+02 -3.8439E+00 -6.1175E+00 8.3771E+040027 1.2046E+05 4.
7958E-020089 771030 18390.0 50630.0 4.1859E+00 4.2728E+02 -3.9411E+00 -4.8909E+00 8.7361E+040027 2.1741E+05 0.0000E+000089 771
030 18438.0 50718.0 6.7593E+00 4.0554E+02 -1.8652E+00 -2.5029E+00 1.1942E+050027 2.3996E+05 0.0000E+000089 771030 18487.0 50
807.0 9.0718E+00 4.1078E+02 -5.5278E+00 -1.2269E+00 1.2332E+050027 1.6445E+05 4.0719E-020089 771030 18536.0 50856.0 6.1296E+0
0 4.0461E+02 -3.7527E+00 -3.4009E+00 1.1475E+050027 2.8651E+05 0.0000E+000089 771030 18584.0 50944.0 8.0647E+00 4.0672E+02 -6
.2722E-01 -6.5756E-01 9.4402E+040027 2.0014E+05 3.9956E-020089 771030 18633.0 51033.0 7.8709E+00 3.9379E+02 1.7390E+00 -5.356
6E+00 9.8818E+040027 1.9140E+05 5.1075E-020089 771030 18682.0 51122.0 7.4744E+00 4.1003E+02 -2.5715E+00 -4.3453E+00 9.7104E+0
40027 1.1915E+05 4.3691E-020089 771030 18730.0 51210.0 8.9785E+00 4.0764E+02 -7.4571E-01 -6.1029E+00 1.1248E+050027 2.4768E+05
0.0000E+000089 771030 18779.0 51259.0 7.1806E+00 4.1475E+02 1.5211E+00 -2.8293E+00 7.2339E+040027 2.3427E+05 4.5116E-020089
771030 18828.0 51348.0 7.9935E+00 4.2093E+02 -7.3202E-01 -8.1240E-01 9.0764E+040027 1.0519E+05 6.9996E-020089 771030 18876.0
51436.0 9.3369E+00 4.1258E+02 -1.5210E+00 2.1694E+00 8.6303E+040027 1.9346E+05 4.0569E-020089 771030 18925.0 51525.0 5.321
1E+00 4.2354E+02 1.8702E+00 1.9568E+00 6.9631E+040027 7.1420E+04 0.0000E+000089 771030 18974.0 51614.0 7.9963E+00 4.2619E+0
2 2.0465E-01 -4.6045E+00 8.7908E+040027 2.0650E+05 5.3434E-020089 771030 19022.0 51702.0 9.4614E+00 4.1519E+02 -6.8452E-02 1
.9985E-01 7.6521E+040027 8.9175E+04 4.1396E-020089 771030 19071.0 51751.0 7.2285E+00 4.1221E+02 -1.0244E+00 -2.8122E+00 8.674
7E+040027 3.0698E+05 4.2457E-020089 771030 19120.0 51840.0 5.7070E+00 4.3189E+02 9.1627E-02 -1.8043E+00 9.6214E+040027 1.0689
E+05 0.0000E+000089 771030 19168.0 51928.0 6.6491E+00 4.1739E+02 -5.9958E-01 -3.6367E+00 8.7681E+040027 9.5410E+04 4.3902E-02
0089 771030 19217.0 52017.0 6.6359E+00 4.2006E+02 -3.4957E+00 -5.8104E+00 9.1741E+040027 1.3759E+05 0.0000E+000089 771030 192
65.0 52105.0 6.0033E+00 4.1159E+02 -2.2050E+00 -1.0503E+00 8.7993E+040027 1.0021E+05 0.0000E+000089 771030 19314.0 52154.0 7
.7854E+00 3.9016E+02 -3.0509E-01 2.3344E-02 8.4239E+040027 2.4636E+05 2.6505E-020089 771030 19363.0 52243.0 6.4750E+00 4.317
3E+02 3.1259E+00 -1.9603E+00 8.8252E+040027 1.3310E+05 4.8476E-020089 771030 19509.0 52509.0 9.5274E+00 3.8447E+02 -4.0066E+0
0 -8.5876E-02 8.3950E+040027 3.9650E+05 0.0000E+000089 771030 19557.0 52557.0 6.5769E+00 4.1808E+02 1.6524E+00 -5.1718E+00 5
.9591E+040027 9.1354E+04 8.7297E-020089 771030 19606.0 52646.0 5.2199E+00 3.9528E+02 4.5349E-01 -3.6053E+00 9.5763E+040027 1.
2965E+05 6.0675E-020089 771030 19655.0 52735.0 6.3003E+00 3.0616E+02 -4.1842E-01 -2.9207E+00 7.7767E+040027 1.1820E+05 4.5727
E-020089 771030 19703.0 52823.0 7.9392E+00 4.2191E+02 2.6397E+00 -4.6218E+00 7.8547E+040027 1.0775E+05 6.7309E-020089 771030
19752.0 52912.0 1.0013E+01 4.0953E+02 -1.5817E-01 -3.6427E+00 8.8211E+040027 1.2552E+05 6.0808E-020089 771030 19801.0 53001.
0 8.5943E+00 4.1541E+02 -6.3130E-01 -1.4115E+00 9.0550E+040027 9.1243E+04 3.3562E-020089 771030 19849.0 53049.0 6.7741E+00 4
.2203E+02 8.7223E-01 -4.6487E+00 9.0146E+040027 1.3346E+05 6.8550E-020089 771030 19898.0 53138.0 5.7028E+00 4.2965E+02 -3.120
5E+00 -4.4463E+00 9.2042E+040027 1.1429E+05 5.2229E-020089 771030 19947.0 53227.0 1.1784E+01 4.1200E+02 -1.9677E+00 -2.2833E+0
0 9.6044E+040027 1.5117E+05 3.8770E-020089 771030 19995.0 53315.0 7.9169E+00 4.0663E+02 -2.0472E+00 -8.0107E-01 1.0406E+05002
7 1.3572E+05 4.7105E-020089 771030 20044.0 53404.0 5.0928E+00 4.1324E+02 9.6055E-02 -1.9381E+00 7.0525E+040027 2.1251E+05 5.
1971E-020089 771030 20093.0 53453.0 7.6636E+00 4.1802E+02 9.4542E-01 -5.4700E+00 8.0856E+040027 2.3074E+05 0.0000E+000089 771
030 20141.0 53541.0 4.7488E+00 4.0464E+02 -4.3454E+00 -1.7422E+00 7.5608E+040027 2.2459E+05 4.3151E-020089 771030 20190.0 53
630.0 6.1853E+00 4.1845E+02 3.2726E+00 -2.4124E+00 9.3713E+040027 2.0344E+05 5.3346E-020089 771030 20238.0 53718.0 6.4847E+0
0 4.0862E+02 9.3500E-01 -3.5833E+00 6.2947E+040027 1.1364E+05 6.5430E-020089 771030 20287.0 53807.0 7.3064E+00 4.1520E+02 -3
.1207E-01 -2.9969E+00 9.3403E+040027 1.2740E+05 0.0000E+000089 771030 20336.0 53856.0 6.5778E+00 4.1128E+02 -1.6493E+00 -2.645
3E+00 7.3667E+040027 1.2605E+05 5.3959E-020089 771030 20384.0 53944.0 6.8124E+00 4.1590E+02 -2.5257E+00 -3.1118E+00 7.6243E+0
40027 1.2605E+05 4.4930E-020089 771030 20433.0 54033.0 6.4644E+00 4.2975E+02 -9.4159E-01 1.1917E-01 6.5362E+040027 1.0891E+05
4.9717E-020089 771030 20482.0 54122.0 6.3202E+00 4.2695E+02 -1.0361E+00 -1.8987E+00 7.3301E+040027 1.0725E+05 5.6557E-020089
771030 20530.0 54210.0 5.7241E+00 4.1687E+02 -4.4160E-01 6.1540E-01 6.2229E+040027 9.3919E+04 4.5943E-020089 771030 20579.0
54259.0 8.6222E+00 4.2601E+02 -7.7330E-02 -2.2698E+00 9.1315E+040027 1.1512E+05 4.6127E-020089 771030 20628.0 54348.0 8.068
6E+00 4.2597E+02 -5.1163E-01 -2.3710E+00 8.2544E+040027 1.6045E+05 4.6131E-020089 771030 20677.0 54437.0 9.3010E+00 4.1563E+0
2 -1.2837E+00 -2.6071E+00 1.0117E+050027 1.5716E+05 4.8612E-020089 771030 20725.0 54525.0 8.0837E+00 4.1482E+02 8.1380E-02 -1
.6070E+00 9.5431E+040027 1.4904E+05 4.8597E-020089 771030 20774.0 54614.0 8.2946E+00 4.2573E+02 1.5475E+00 -3.8255E+00 9.826
2E+040027 1.5692E+05 4.5667E-020089 771030 20822.0 54702.0 5.7067E+00 4.1089E+02 3.5238E+00 -9.5760E-01 8.2720E+040027 2.1222
E+05 4.8407E-020089 771030 20871.0 54751.0 5.6224E+00 4.1152E+02 -1.2026E+00 -4.3954E+00 6.9918E+040027 2.7114E+05 3.8100E-02
0089 771030 20920.0 54840.0 6.9438E+00 4.0310E+02 -1.4906E+00 -4.1551E+00 9.0549E+040027 1.2207E+05 5.4758E-020089 771030 209
68.0 54928.0 1.0869E+01 3.9857E+02 -2.6692E+00 -1.0894E+00 9.5300E+040027 1.5169E+05 4.5540E-020089 771030 21017.0 55017.0 6

HEX DUMP OF KM2002

FILE 1 RECORD 1 4000 BYTES

(0)	A6430000	58440000	DA4800E5	40410000	80400000	93412A93	A14258A1	D0C1BFFB	DEC30000	DEC30000
(40)	DEC30000	DEC30000	DEC30000	DEC30000	DEC30000	DEC30000	DEC30000	DEC30000	DEC30000	DEC30000
(80)	DEC30000	DEC30000	DEC30000	DEC30000	DEC30000	DEC30000	DEC30000	DEC30000	DEC30000	DEC30000
(120)	DEC30000	DEC30000	DEC30000	DEC30000	DEC30000	DEC30000	DEC30000	DEC30000	DEC30000	DEC30000
(160)	DEC30000	DEC30000	DEC30000	DEC30000	DEC30000	DEC30000	DEC30000	DEC30000	DEC30000	DEC30000
(200)	DEC30000	DEC30000	DEC30000	DEC30000	DEC30000	DEC30000	DEC30000	DEC30000	DEC30000	DEC30000
(240)	DEC30000	DEC30000	DEC30000	DEC30000	DEC30000	DEC30000	DEC30000	DEC30000	DEC30000	DEC30000
(280)	DEC30000	DEC30000	DEC30000	DEC30000	DEC30000	DEC30000	DEC30000	DEC30000	DEC30000	DEC30000
(320)	DEC30000	DEC30000	DEC30000	DEC30000	DEC30000	DEC30000	DEC30000	DEC30000	DEC30000	DEC30000
(360)	DEC30000	DEC30000	DEC30000	DEC30000	DEC30000	DEC30000	DEC30000	DEC30000	DEC30000	DEC30000
(400)	A6430000	58440000	DA4800E5	2C430000	00000000	93190ACF	3A18AEB4	FC19ABD4	3A18AEB4	00000000
(440)	00000000	00000000	BA17AEB4	9B179096	00000000	EE1871C9	00000000	00000000	00000000	00000000
(480)	0C198207	9F17F530	A9176D58	F817E9F0	00000000	00000000	00000000	00000000	00000000	00000000
(520)	00000000	00000000	00000000	00000000	00000000	00000000	00000000	00000000	00000000	1F17F530
(560)	00000000	00000000	00000000	00000000	00000000	00000000	00000000	00000000	00000000	00000000
(600)	00000000	00000000	00000000	00000000	00000000	00000000	00000000	00000000	00000000	00000000
(640)	00000000	00000000	00000000	00000000	00000000	00000000	00000000	00000000	7817E9F0	0B19D74A
(680)	29186D58	7817E9F0	00000000	1B189096	3A18AEB4	00000000	00000000	7817E9F0	00000000	C218357C
(720)	7817E9F0	00000000	00000000	BA18AEB4	0019375C	00000000	00000000	00000000	A9176D58	D31A25FD
(760)	D31AAE80	A519FA4F	00000000	6E1871C9	00000000	9B199096	3A18AEB4	4219357C	7817E9F0	F319F8C2
(800)	A6430000	58440000	FA480021	30430000	00000000	6819F957	5E1A6B68	981990DB	00000000	FA166C3C
(840)	00000000	0619C683	12174CBE	65195649	12184CBE	00000000	00000000	C31765A8	00000000	74177E92
(880)	AB185933	00000000	00000000	431765A8	00000000	00000000	00000000	00000000	00000000	00000000
(920)	00000000	00000000	00000000	00000000	00000000	00000000	00000000	00000000	00000000	00000000
(960)	00000000	00000000	00000000	00000000	00000000	00000000	85174A19	00000000	00000000	00000000
(1000)	00000000	00000000	00000000	00000000	00000000	00000000	00000000	00000000	00000000	00000000
(1040)	00000000	00000000	00000000	00000000	85174A19	431765A8	00000000	00000000	00000000	00000000
(1080)	00000000	C31765A8	00000000	981890DB	00000000	1C18C365	05184A19	00000000	00000000	00000000
(1120)	0619C683	1C18C365	85174A19	281AB724	92174CBE	F4177E92	6819F957	DA18DFF4	05184A19	C919A8C5
(1160)	AF1A7767	A21A4769	74187E92	00000000	E81841EC	D6193000	251BD4A8	3719DF6D	74187E92	00000000
(1200)	A6430000	58440000	0C49C0AE	34430000	4E175E7C	E31853A7	E719EE35	A019A611	361AE098	4218CC1A
(1240)	CE185E7C	1718E2C4	00191E0E	00000000	9319BC06	00000000	00000000	9717E2C4	80181E0E	BD171AB6
(1280)	00000000	00000000	00000000	00000000	00000000	00000000	00000000	00000000	00000000	00000000
(1320)	E31651A7	00000000	00000000	F2177DA1	00000000	00000000	00000000	00000000	00000000	00000000
(1360)	00000000	00000000	00000000	00000000	00000000	00000000	00000000	00000000	00000000	00000000
(1400)	00000000	00000000	00000000	00000000	00000000	00000000	00000000	00000000	00000000	00000000
(1440)	00000000	00000000	00000000	00000000	00000000	00000000	00000000	00000000	00000000	C216CC1A
(1480)	00000000	D018B6AE	E31651A7	00000000	00000000	00000000	1A1847DD	AA187EBD	AA177DBD	00000000
(1520)	00000000	00000000	CE175E7C	80191F0E	00191E0E	6D18A123	00000000	00000000	4E175E7C	F119C7E1
(1560)	6A198DC4	891A4FD6	2D1A921C	00000000	00000000	2D1A921C	C71B516B	6D19A123	5A19052B	00000000
(1600)	A6430000	58440000	1C49C04C	38430000	EF170661	BA1947F1	7E1AFA4B	A919FD87	EA173198	00000000
(1640)	1F170596	1919E0F3	A41803F3	12191F9F	A41902F3	D71844A6	00000000	00000000	AF1625F2	00000000
(1680)	AF1725F2	16175C04	00000000	00000000	00000000	00000000	EA163198	00000000	00000000	00000000
(1720)	00000000	00000000	00000000	00000000	00000000	00000000	00000000	00000000	00000000	00000000
(1760)	00000000	00000000	00000000	00000000	00000000	00000000	1F170596	00000000	00000000	00000000
(1800)	00000000	00000000	00000000	00000000	00000000	00000000	00000000	96165C04	00000000	EA163198
(1840)	00000000	00000000	00000000	96165C04	00000000	00000000	00000000	00000000	00000000	96165C04
(1880)	00000000	00000000	00000000	12171F9F	6A173198	3B187385	1F170596	A118A148	83189CF5	12181F9F
(1920)	6A193198	3B187385	00000000	D8194D44	D0188CEF	92171F9F	1919E0F3	0318D043	00000000	83189BF5
(1960)	3519B671	C519D305	00000000	BB177385	1F170596	B319859C	DC1AA09E	BB19E1DB	6A173198	E1188A06
(2000)	A6430000	58440000	2B49C0EA	3C430000	DA16CD7C	20182697	081A6A70	6819751A	1619B38D	00000000
(2040)	23189ADD	2519E09B	2919695F	9617B38D	20172697	00000000	DA16CD7C	F017BAE2	7017B8E2	C816EFBC
(2080)	00000000	00000000	00000000	00000000	00000000	00000000	7017BAE2	4D16FF62	00000000	00000000
(2120)	00000000	00000000	00000000	00000000	5A17CD7C	00000000	00000000	00000000	00000000	00000000
(2160)	00000000	00000000	00000000	00000000	00000000	00000000	00000000	00000000	00000000	00000000

D-101530
77-02A-03G
ISEE-1
08/04/83 - 9/12/83

(2200)	00000000	00000000	00000000	00000000	00000000	00000000	00000000	00000000	DA16CD7C	00000000
(2240)	00000000	00000000	00000000	00000000	DA16CD7C	20172697	00000000	00000000	A0162697	4D16FF62
(2280)	5A17CD7C	00000000	F016B8E2	00000000	00000000	0018DF5D	DA16CD7C	4818EFBC	B4170AAA	00000000
(2320)	A0162697	1A17400A	DA17CD7C	751973E7	7F18E3F0	00000000	00000000	00000000	5A17CD7C	99191110
(2360)	8F189E06	9617B38D	0C194184	8D180F34	00000000	A0182697	BE19E612	0A19E501	7018BAE2	CD16FF62
(2400)	A6430000	58440000	3B490089	40430000	00000000	3C191D4C	73196262	1B19C23E	D0183754	00000000
(2440)	00000000	70182D61	8A18DF37	9618BC3C	00000000	00000000	00000000	00000000	D8177557	00000000
(2480)	00000000	00000000	00000000	00000000	00000000	00000000	00000000	00000000	00000000	00000000
(2520)	00000000	00000000	8016D433	00000000	00000000	00000000	00000000	00000000	00000000	00000000
(2560)	00000000	00000000	00000000	00000000	00000000	00000000	00000000	00000000	00000000	00000000
(2600)	00000000	00000000	00000000	00000000	00000000	00000000	00000000	00000000	00000000	00000000
(2640)	00000000	00000000	00000000	00000000	00000000	00000000	00000000	00000000	00000000	00000000
(2680)	AE173C6C	8016D433	00000000	00000000	00000000	00000000	AE173C6C	E017B35A	04187135	00000000
(2720)	8016D433	00000000	00000000	4018BD4D	3D19854C	8218A334	8018D433	4C178AF4	00000000	6018B35A
(2760)	EA18BD5E	2F19DB46	F219FA61	FB18F511	AE163C6C	A8180544	971956BD	9618BC3C	6018B35A	4C178AF4
(2800)	A6430000	58440000	4B490027	44430000	0117672B	3D16B9E1	03190F49	B2189B03	26188025	00000000
(2840)	0117672B	3D18B9E1	4318C3D0	B2179B03	3D17B9E1	F21544D9	00000000	BD16B9E1	0E174969	00000000
(2880)	3D16B9E1	00000000	00000000	3D16B9E1	00000000	00000000	00000000	00000000	00000000	00000000
(2920)	00000000	00000000	00000000	00000000	00000000	00000000	00000000	00000000	00000000	00000000
(2960)	00000000	00000000	00000000	00000000	00000000	00000000	00000000	00000000	00000000	00000000
(3000)	00000000	00000000	00000000	00000000	00000000	00000000	00000000	00000000	00000000	00000000
(3040)	00000000	00000000	00000000	00000000	00000000	00000000	00000000	00000000	00000000	00000000
(3080)	41171AC1	0E174A69	00000000	00000000	00000000	721644D9	41171AC1	BD16B9E1	32179A03	6D16255A
(3120)	00000000	B616F422	8116672B	3D16B9E1	32189A03	94185858	3D17B9E1	9717CBC7	00000000	2319FA2D
(3160)	22191870	40183ED9	00000000	F21544D9	41171AC1	58197595	0C19A42F	1019EEA2	26188025	F21744D9
(3200)	A6430000	58440000	5A4940C5	48430000	3B177F70	DB181292	4319705A	16188AAF	4E179AA7	B0154833
(3240)	3B167F70	4E179AA7	E8178E7C	AC165636	F117DD18	B0154833	00000000	891611C5	00000000	00000000
(3280)	891611C5	00000000	00000000	091611C5	00000000	00000000	091611C5	00000000	00000000	00000000
(3320)	00000000	00000000	00000000	00000000	00000000	00000000	00000000	00000000	00000000	00000000
(3360)	00000000	00000000	00000000	00000000	00000000	00000000	00000000	00000000	00000000	00000000
(3400)	00000000	00000000	00000000	00000000	00000000	00000000	00000000	00000000	3B167F70	00000000
(3440)	00000000	00000000	00000000	00000000	00000000	00000000	00000000	00000000	00000000	00000000
(3480)	0C175F94	00000000	CE159AA7	00000000	091611C5	B0154833	3B167F70	CE169AA7	9A16B3FD	00000000
(3520)	00000000	00000000	3B167F70	7118DD18	CE179AA7	8117C028	891611C5	00000000	3B167F70	7117DD18
(3560)	C1171FBD	8118C028	0118C028	00000000	3B177F70	14197688	F818A5A1	0117C028	2318049A	00000000
(3600)	A6430000	58440000	6A494063	4C430000	00000000	05175C66	A218BF94	05185C66	4118046E	00000000
(3640)	00000000	3A1781C2	5C17161C	C8168919	05175C66	00000000	00000000	00000000	20166E14	00000000
(3680)	55169470	00000000	00000000	00000000	00000000	00000000	00000000	00000000	00000000	00000000
(3720)	00000000	00000000	00000000	00000000	00000000	00000000	00000000	00000000	00000000	00000000
(3760)	00000000	00000000	00000000	00000000	00000000	00000000	00000000	00000000	00000000	00000000
(3800)	00000000	00000000	00000000	00000000	00000000	00000000	00000000	00000000	1116F931	00000000
(3840)	00000000	00000000	00000000	00000000	00000000	00000000	00000000	00000000	00000000	00000000
(3880)	00000000	D5159470	00000000	00000000	00000000	00000000	1116F931	A0166E14	20166E14	00000000
(3920)	00000000	00000000	1116F931	A0176E14	FA17EB1F	85165C66	05175C66	00000000	9116F931	55189470
(3960)	FA17EB1F	85165C66	00000000	00000000	00000000	121864BD	89188E91	D81756C6	921764BD	8815367D

HEX DUMP OF KM2002

FILE 1 RECORD 2467 4000 BYTES

$EXE TPDUMP BS

ISEF-I LEPCDEA

DUMP OF TAPE JOUT1

D-79630

INPUT TAPE JOUT1 CN FT1

DATA INPUT H9 NF=1 FL=1=1=1

11/1/77

4/5/78 - 4/28/78

11.0 305.0

F: 1

FILE 1 RECORD 1 LENGTH 6560BYTES

(0)	9A43C000	98440080	BA4B2AA3	40410000	8C4C0000	CC41D2E6	3B407FE1	2541EF25	DEC30000	DEC30000
(40)	DEC30000	DEC30000	DEC30000	DEC30000	DEC30000	DEC30000	DEC30000	DEC30000	DEC30000	DEC30000
(80)	DEC30000	DEC30000	DEC30000	DEC30000	DEC30000	DEC30000	DEC30000	DEC30000	DEC30000	DEC30000
(120)	DEC30000	DEC30000	DEC30000	DEC30000	DEC30000	DEC30000	DEC30000	DEC30000	DEC30000	DEC30000
(160)	DEC30000	DEC30000	DEC30000	DEC30000	DEC30000	DEC30000	DEC30000	DEC30000	DEC30000	DEC30000
(200)	DEC30000	DEC30000	DEC30000	DEC30000	DEC30000	DEC30000	DEC30000	DEC30000	DEC30000	DEC30000
(240)	DEC30000	DEC30000	DEC30000	DEC30000	DEC30000	DEC30000	DEC30000	DEC30000	DEC30000	DEC30000
(280)	DEC30000	DEC30000	DEC30000	DEC30000	DEC30000	DEC30000	DEC30000	DEC30000	DEC30000	DEC30000
(320)	DEC30000	DEC30000	DEC30000	DEC30000	DEC30000	DEC30000	DEC30000	DEC30000	DEC30000	DEC30000
(360)	DEC30000	DEC30000	DEC30000	DEC30000	DEC30000	DEC30000	DEC30000	DEC30000	DEC30000	DEC30000
(400)	DEC30000	DEC30000	DEC30000	DEC30000	DEC30000	DEC30000	DEC30000	DEC30000	DEC30000	DEC30000
(440)	DEC30000	DEC30000	DEC30000	DEC30000	DEC30000	DEC30000	DEC30000	DEC30000	DEC30000	DEC30000
(480)	DEC30000	DEC30000	DEC30000	DEC30000	DEC30000	DEC30000	DEC30000	DEC30000	DEC30000	DEC30000
(520)	DEC30000	DEC30000	DEC30000	DEC30000	DEC30000	DEC30000	DEC30000	DEC30000	DEC30000	DEC30000
(560)	DEC30000	DEC30000	DEC30000	DEC30000	DEC30000	DEC30000	DEC30000	DEC30000	DEC30000	DEC30000
(600)	DEC30000	DEC30000	DEC30000	DEC30000	DEC30000	DEC30000	DEC30000	DEC30000	DEC30000	DEC30000
(640)	DEC30000	DEC30000	DEC30000	DEC30000	9A43C000	98440080	BA4B2AA3	58430000	D6157D89	3915C809
(680)	07169CDF	A315A395	3615435B	A30AF1DC	A20B221A	510B542F	3D0BFCA0	FF0AFC7D	3B164FB8	B915C809
(720)	4E1569CF	DA15D91C	C81673C4	CACB42A7	D3CBEC09	230BAAF4	560BDC18	4F0BE2FA	20161FE7	5715C1E0
(760)	A91583D7	3E163ED9	58165F8C	3DCB9E12	9ECF2AFC	FC0AFF73	0C0B3FB1	430B0E60	3B164FB8	D715C1E0
(800)	981590DB	08160852	E31515F2	FC0AD418	2B0B1547	3A0E0092	060B4793	3C0B9E12	F115AE5A	D715C1E0
(840)	4B1569CF	5A15D91C	E31515F2	D60A4F48	C60BFFCD	510B542F	620BC954	750B68CB	E115AE5A	3915C809
(880)	87159CDF	5A15D91C	1416272A	4FCBE2FA	01CCCEFC	A10B0021	490BEBDC	1C0B858F	A0151FE7	D715C1E0
(920)	87159CDF	5A15D91C	631515F2	E2CA27E3	95CB32CE	230BAAF4	49CBEBDC	1C0B858F	C616FE15	E615B6B7
(960)	A91583D7	08160852	1F16DB8F	BD0A9E12	560BDC18	180B00A6	250B1E29	100BADF4	D6157D89	8A1556C7
(1000)	87159CDF	BE153ED9	CD15AD26	490B77AD	7A0BA8CC	450BABE0	950B32DF	170B1942	20161FE7	D715C1E0
(1040)	87159CDF	BE153ED9	081673C4	BDCA9E12	89CE44A2	AC0EAB6F	9B0B2AFC	5C0BB995	D6157D89	8A1556C7
(1080)	FE1543C3	F5157560	E31515F2	C90A77AD	56CFDC18	23CBAAF4	830B4BF4	300BC777	A0151FE7	E614B6B7
(1120)	BA1576D3	3E163ED9	9F15DB8F	7C0AD418	490BEBDC	5C0B017E	830B4B84	230BF1DC	F115AE5A	03169911
(1160)	DC155CCB	88150852	1416272A	17CE1942	7A0BA8CC	070B0CBC	7A0BA8CC	100BADF4	7116AE5A	C8154475
(1200)	981590DB	A315A395	2A168FF5	BDCA9E12	B4CEC974	9C0BCC2B	560BDC18	4F0BE2FA	BB154FB8	C8154475
(1240)	4B1669CF	A315A395	B01669A8	360B33C5	BA0B0292	840B56DC	1A0CAC74	B00AC777	C6157D89	E7153A4C
(1280)	BA1576D3	3E163ED9	1F16DB8F	E20A27E3	890B44A2	730B561B	180B2EED	BD0A9E12	9A430000	98440080
(1320)	BB4B1C20	5C430000	FF1584CF	5D157852	CE15A8CA	9E1563F3	2E16216C	B10AB738	420B56A4	B8CA791A
(1360)	ACCA5702	82CA9695	FE1584CF	4A157545	AD154A48	6E15166D	A615C61D	B10AB738	930BF41C	FB0AA404
(1400)	FD0AB87C	BA0A8C8C	FE1584CF	CA157545	B915E1A8	1E1563F3	0415ABE4	150B3C3D	390BBD96	010B55B1
(1440)	EBCA8761	D6CAC788	FE1584CF	8614F9D8	14151987	0B16F714	B6156BBA	FB0A56D7	4B0BF0B1	D10A892E
(1480)	A20ACCF4	B1CAB738	FE1584CF	E7157338	14151987	15162DC4	8415ABE4	FB0A56D7	660BEBDA	AF0A74B6
(1520)	A20ACCF4	820A9695	C315656E	E313F7CB	5E15A8CA	1E1563F3	68152C9C	B10AB738	5C0B1FCD	23CB6A29
(1560)	FD0AB87C	DF0ADBDB	1C155158	B315E7CB	88158326	6F15166D	B6156BBA	150B3C3D	270B8C7B	D90A8E8C
(1600)	C7CBF5CB	CBCB69E9	881548CD	A815378F	B915E1A8	C6153DBC	15164C81	BACA8C8C	C70BF5CB	C80A83D0
(1640)	99CA27E7	A7CAF4E4	881548CD	A815378F	C6157BC9	FE15166D	8414ABE4	C20A9695	870AF5CB	120B606D
(1680)	FD0AB87C	FB0A56D7	EA147984	8615F9D8	88158326	B215D1D1	0416ABE4	CD0A3334	ACCA5702	010B55B1
(1720)	270B8C7B	190B27E7	881548CD	4A157545	94151987	9F1563F3	E8152C90	8B0A69E9	7C0AB87C	850A58E0
(1760)	27CB8C7B	C3CA60E0	FE1584CF	77157338	46157BC9	6E15166D	0C16F632	82CA9695	FC0AB87C	6ACA9A48
(1800)	270B8C7B	BACA8C8C	1C165158	5D157852	E714D6BB	15162DC4	8415ABE4	E20A8383	390BBD96	E20A5EA6
(1840)	420B56A4	C30A60E0	4315656E	0615F9D8	AD154A48	8B15F714	1D168BCF	A70AE4E4	390BBD96	330B77E5
(1880)	1ECBF36D	19CB27E7	AF155BE3	CA157545	AD154A48	B215D1D1	36166BBA	E20A8383	300B2689	3C0B7C43
(1920)	A5CB2638	10CB5293	AF155BE3	EB15B4FB	CE16CE56	46153DBC	15164C81	720A8383	300B2689	EA0A9A48
(1960)	A20ACCF4	CD0A3334	9A43C000	98440080	FB4F0C9D	60430000	E8152EAC	7C155454	E915CC45	051624D8
(2000)	46151FF0	8F0A3D5D	E50AF397	8D0A7D77	5E0ADEA2	650AFC61	6A156F0B	B0156EA1	8A15CAF6	941544B7
(2040)	D315205F	FCCA0B8C	E5CAF397	74CA065A	52CAF11A	9C0A5DB3	E8152EAC	8E1596FC	9D15187E	6D1506E2
(2080)	2E151B12	B3CA8C34	F3CA2182	8DCA7D77	99CAF8CF	57CADBCB	AC15CDE7	1715CC65	7D15F7DE	B2158575
(2120)	C6151FF0	480ABCB5	F30A2182	A00AF7C1	A60A27EA	8F0A3D5D	12162747	06156193	9415713A	941544B7
(2160)	211619A3	880A2E32	6C0A0B8D	930AA6E5	8B0ACB25	AC0A7D09	12152747	A8143838	A6158FC1	B2158575
(2200)	5E1523CF	2CCA7D09	46CBCC49	80CA2C9B	6CCA0B8D	BA0A9C5E	AF145488	CA157CAF	811523B3	DF15E612
(2240)	D315205F	880A2E32	D70AC7AD	8DCA7D77	99CAF8CF	650AFC61	92152747	9715CC65	4B155BDC	391614E5
(2280)	2E161B12	650AFC61	AD0A3DEF	CD0A12C5	F30A2182	880A2E32	6A156F0B	1715CC65	8A15CAF6	C115A654

```
(  6240)   A01570F3   1715B070   DE14A667   A31528A2   9514D23E   730AA2C9   990AFA1A   400AA1F6   840A353A   BA0A046D
(  6280)   CC15BDD8   A8145144   011576BC   9415F5C1   F81409BE   65097A72   500AB2C7   E7095C8E   AD0AC0EB   CE0ABEEF
(  6320)   6A15441C   1715B070   5E14A667   B2145B82   F8140 9BE   2C0ADD15   420AE4DC   0C0AA9E1   6C0A0E9E   040B2FA6
(  6360)   6A15441C   28155144   DE14A667   B2145B82   9515D23E   01CA6510   FA093CE5   CC0A6CA4   BB0AECE6   E50A7A72
(  6400)   4C15BDD8   06150D9D   011576BC   1415F5C1   781509BE   730AA2C9   7A0A3C89   740A996B   6C0A0E9E   C10A9798
(  6440)   BE15E736   9715B070   DE14A667   1415F5C1   F81509BE   570A531B   8B0SCD2E   CD0SEC D3   920A6325   E50A7A72
(  6480)   EA14441C   5A1537BF   011576BC   32155B82   7815C9BE   1CCAB5BE   500AE2C7   8C0A6CA4   E50A77AE   C10A9798
(  6520)   F81509BE   7C157B66   DE14A667   32155B82   8815ECCE   570A531B   340A57F1   5A0A1DB1   A70A2806   C10A9798
```

FILE	INPUT RECS.	DATA RECORDS INPUT	MAX. SIZE	READ ERROR SUMMARY PERM	ZERO B	SHORT	UNDEF.	INPUT RETRIES #RECS.	TOTAL#
1	17508	17509	6560	0	0	0	0	0	0

EOJ DUMP STOPPED AFTER FILE 1 # OF PERMANENT READ ERRORS 0

START TIME 11/01/89 18:40:47 STOP TIME 11/01/89 18:46:04

$$