732

IMP-J

1-MIN AVERAGED MAG. VCTS

73-078A-01L

| REQ. AGENT | ACQ. AGENT |
|---|---|
| CMW | JHK |

IMP-J

1-MIN AVERAGED MAG. VCTS

73-078A-01L

This data set consists of 6 magnetic tapes.

These tapes, blocked 100 logical records/physical record, are 9 track, 6250 bpi, ASCII, created on a VAX computer. Each file on tape contains data for a month.

The backup is a 3480 cartridge. D and C numbers and time span are as follows:

| D# | C# | FILES | TIME SPAN |
|---|---|---|---|
| D-101582 | C-031130 | 6 | 07/18/91 - 12/31/91 |
| D-104084 | C-031224 | 12 | 01/02/92 - 12/30/92 |
| D-107639 | C-031503 | 12 | 01/02/93 - 12/31/93 |
| D-108018 | C-031741 | 6 | 01/01/94 - 06/30/94 |
| D-108211 | C-031958 | 2 | 01/01/95 - 03/01/95 |
| D-108385 | C-032454 | 4 | 02/28/95 - 06/30/95 |

01-June-1994

IMP-J
73-078A-01L
1.024 MINUTE AVERAGES
Based on 15.36 second averages

The IMP-J 1-minute average data are in ASCII format produced on a DEC VAX computer.

Note: The time given in calendar day (Jan. 1 = Day 1) beginning with 1992 data. Pre-1992 data is in Decimal Day, where Jan 1 = Decimal Day 0.

Note: Record length = 209 bytes, Blocksize = 20900 bytes

| | ITEM | FORMAT UNITS | NOTES |
|---|---|---|---|
| 1 | Year | I3 | (2 digit year) |
| 2 | Time | F10.5 | (floating point time = day.fraction) |
| 3 | Month | A4 | (ex. Jan) |
| 4 | Day of month | I3 | |
| 5 | F1 | F7.2 nanotesla | (avg. of field magnitude) |
| 6 | F2* | F7.2 nanotesla | (field magnitude) |
| 7 | X | F7.2 nanotesla | (GSE coord.) |
| 8 | Y | F7.2 nanotesla | (GSE coord.) |
| 9 | Z | F7.2 nanotesla | (GSE coord.) |
| 10 | Y | F7.2 nanotesla | (GSM coord.) |
| 11 | Z | F7.2 nanotesla | (GSM coord.) |
| 12 | RMS(X) | F9.2 nanotesla | |
| 13 | RMS(Y) | F9.2 nanotesla | |
| 14 | RMS(Z) | F9.2 nanotesla | |
| 15 | RMS | F9.2 nanotesla | |
| 16 | space | 1X | |
| 17 | PHI | F7.2 degrees | (GSE coord.) |
| 18 | THETA | F7.2 degrees | (GSE coord.) |
| 19 | PHI | F7.2 degrees | (GSM coord.) |
| 20 | THETA | F7.2 degrees | (GSM coord.) |
| 21 | SCXE | E11.3 km | (S/C position GSE coord.- X) |
| 22 | SCYE | E11.3 km | (S/C position GSE coord.- Y) |
| 23 | SCZE | E11.3 km | (S/C position GSE coord.- Z) |
| 24 | SCYM | E11.3 km | (S/C position GSM coord.- Y) |
| 25 | SCZM | E11.3 km | (S/C position GSM coord.- Z) |
| 26 | R | E11.3 km | (radial distance) |
| 27 | NP | I3 | (number of points in average)** |
| 28 | Mode | I2 | (bit rate: 0=low,1=high) |
| 29 | DQF | I2 | (data quality flag) |
| 30 | Gap | I2 | (data gap flag) |

* F2 is Pythagorean mean of component average
** NP represents the aggregate number of 1.28 second averages in the 15.36 second averages that are used to develop the 1.024 minute averages and RMS's

Richard S. Kennon GSFC Greenbelt, MD Code 694
Phone: (301) 286-3045
Internet: U4RSK@LEPVAX.GSFC.NASA.GOV

11/15/93

# IMP-8
## PRELIMINARY 1.024 MINUTE AVERAGES

Gap Flag (item # 29) is in error in 1991 ( July 18 through end of year) and 1992 datasets. The gap flag is turned on (set to 2) for all records, whether a gap exists or not.

There is another error in the flag for missing values for RMS(items #12-#15). The flag should be 99999.0 . However, the output statement rounded this value to 1.0E+05 (100000.) .

This data will be replaced.

R. S. Kennon 6-3045

02/01/94

A NOTE IN REFERENCE TO IMP-J (73-078A-01L)

PLEASE NOTE THE LATER '91 DATA IS FINE IN MOST REGARDS, EXCEPT THAT THE PI HAD INCORRECTLY USED A WRONG BZ ZERO OFFSET, WHICH MUST BE REMOVED BEFORE USING THESE DATA. THE DATA ARE BEING REPROCESSED WITH THE CORRECTION AND WITH OTHER IMPROVEMENTS. BUT IF YOU DO YOUR OWN CORRECTING, YOU SHOULD NOT FEEL THE NEED TO BE HELD UP FOR THE NEW PROCESSING. LET ME BE CLEAR ABOUT THE OFFSET AND ITS SIGN. IF ONE DOES AN ANALYSIS, HE WILL SEE THAT THE FIELD IS OFF BY A BZ OF (-) 0.59 nT. SO 0.59 MUST BE ADDED TO THE DATA TO CORRECT IT. [BY THE WAY, TELL CHRIS THIS WAS NOT A DRIFT (THEY ARE VERY SMALL); IT WAS A BAD JUDGEMENT!] BEST WISHES, AND KEEP IN TOUCH WITH US IN THE USE OF THESE DATA. THANKS. RON LEPPING PS. ALMOST FORGOT: THE START OF THE BAD ZERO PERIOD IS 18 JULY '91 AND IT ENDS AT THE LAST MINUTE OF THE YEAR.

RON LEPPING

# MEMO

**Date:** June 8, 1993

**To:** Users of IMP-8 magnetic field data

**From:** Ron Lepping/IMP-8 Magnetometer PI, NASA-GSFC, Code 695, SPAN address LEPVAX::U5RPL, phone: (301) 286 5413

**Re:** IMP-8 magnetic field data: Notification of day-count designation change

As all or most of you know, our IMP-8 magnetic field data since launch has been labeled according to a Decimal Day scheme, where Jan 1 = Decimal Day 0, instead of the more common Day-of-Year (DOY) scheme, where Jan 1 = DOY 1. Since our data have been, and are being, processed within the International Solar-Terrestrial Physics (ISTP) program since late 1992 as so-called Key Parameters where the DOY designation is used, we will now convert our in-house processed data (i.e., on LEPVAX/GSFC) to a DOY time base, starting for that data occurring at the first instant of year 1992. Obviously, we wish to avoid the uncomfortable position of having two identical magnetic field data sets possessing two different day-count designations, arising because of the two different sources. All future data products (tapes, electronic-mail files, paper plots, etc.) will reflect this change. And as soon as we are able to make the modification, most of these products will also contain Month and Day-of-Month with the hope that the chance of future day-count errors is reduced by this redundancy. If we should reprocess any data for periods earlier than the first instant of 1992, for any reason, we will retain the Decimal Day designation for such data.

We are sorry for any inconvenience that this may cause you or your teams. As Joe King (IMP-8 Project Scientist) commented recently, "Maybe we can say with pride, at the end of the IMP mission, that the magnetic field day-count change took place about half way through the mission!"

Ron Lepping

NSSDC will hold its IMP-8 MAG data in adherence to the Decimal Day and DOY conventions described above, with the 1/1/92 shift in conventions. Exception to this is OMNI where all data, IMP-8 MAG included, use DOY throughout. Joe King 6/24/94

# IMP-8 SOLAR WIND MAGNETIC FIELD AND PLASMA DATA IN SUPPORT OF ULYSSES - JUPITER ENCOUNTER: 13-31 JANUARY 1992

R. P. LEPPING, A. J. LAZARUS, L. J. MORIARTY, P. MILLIGAN,
R. S. KENNON, R. E. McGUIRE, AND W. H. MISH

DECEMBER 25,1992

LABORATORY FOR EXTRATERRESTRIAL PHYSICS

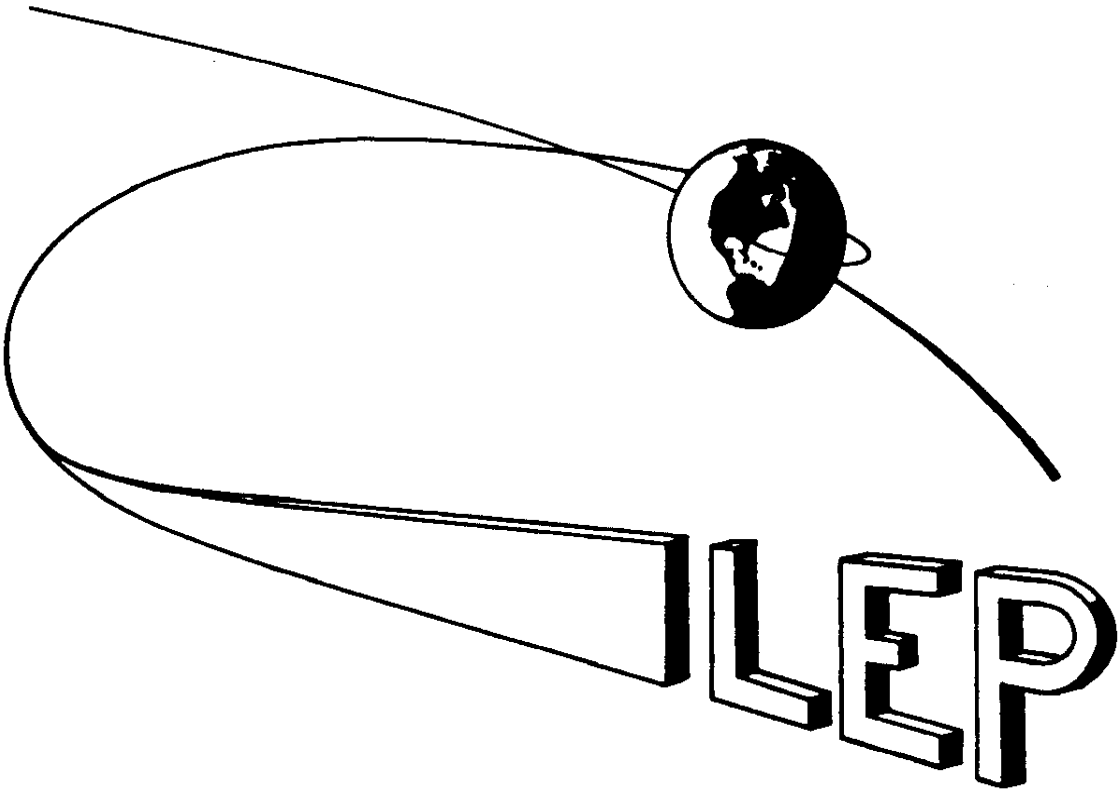


National Aeronautics and Space Administration
Goddard Space Flight Center
Greenbelt, Maryland 20771

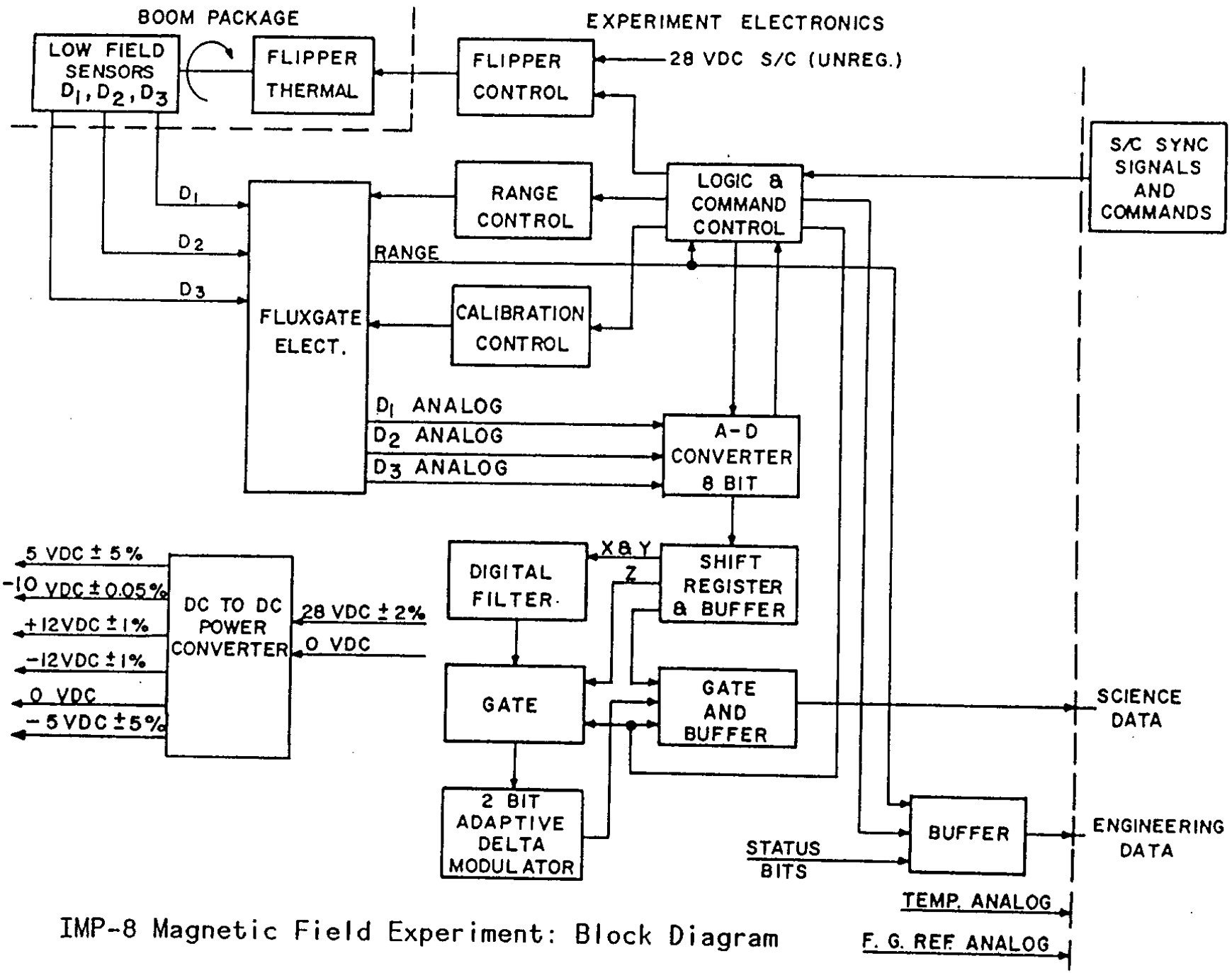


IMP-8 Magnetic Field Experiment: Block Diagram

FIGURE A-4

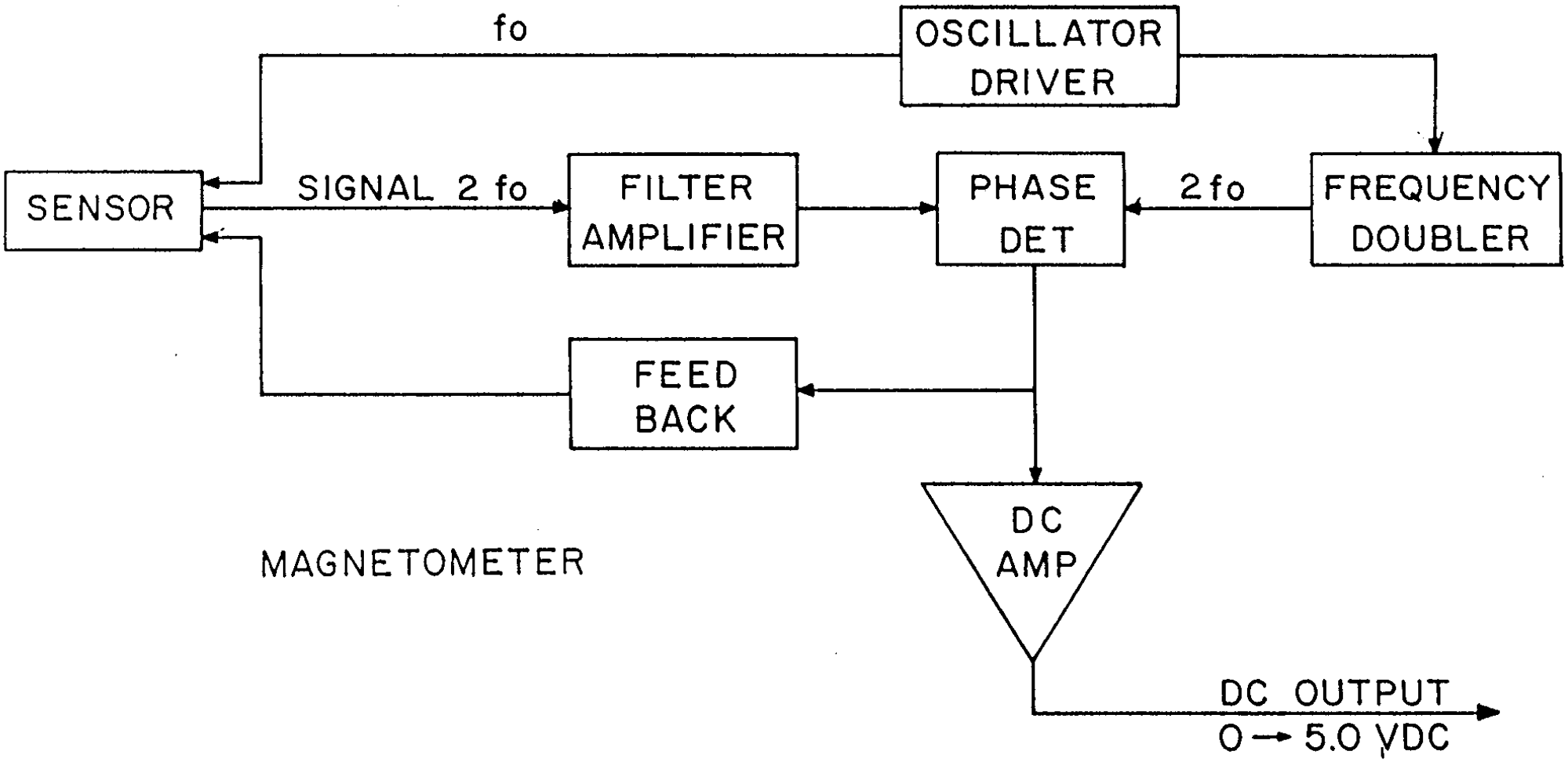


FIGURE A-5 Electronics Block Diagram

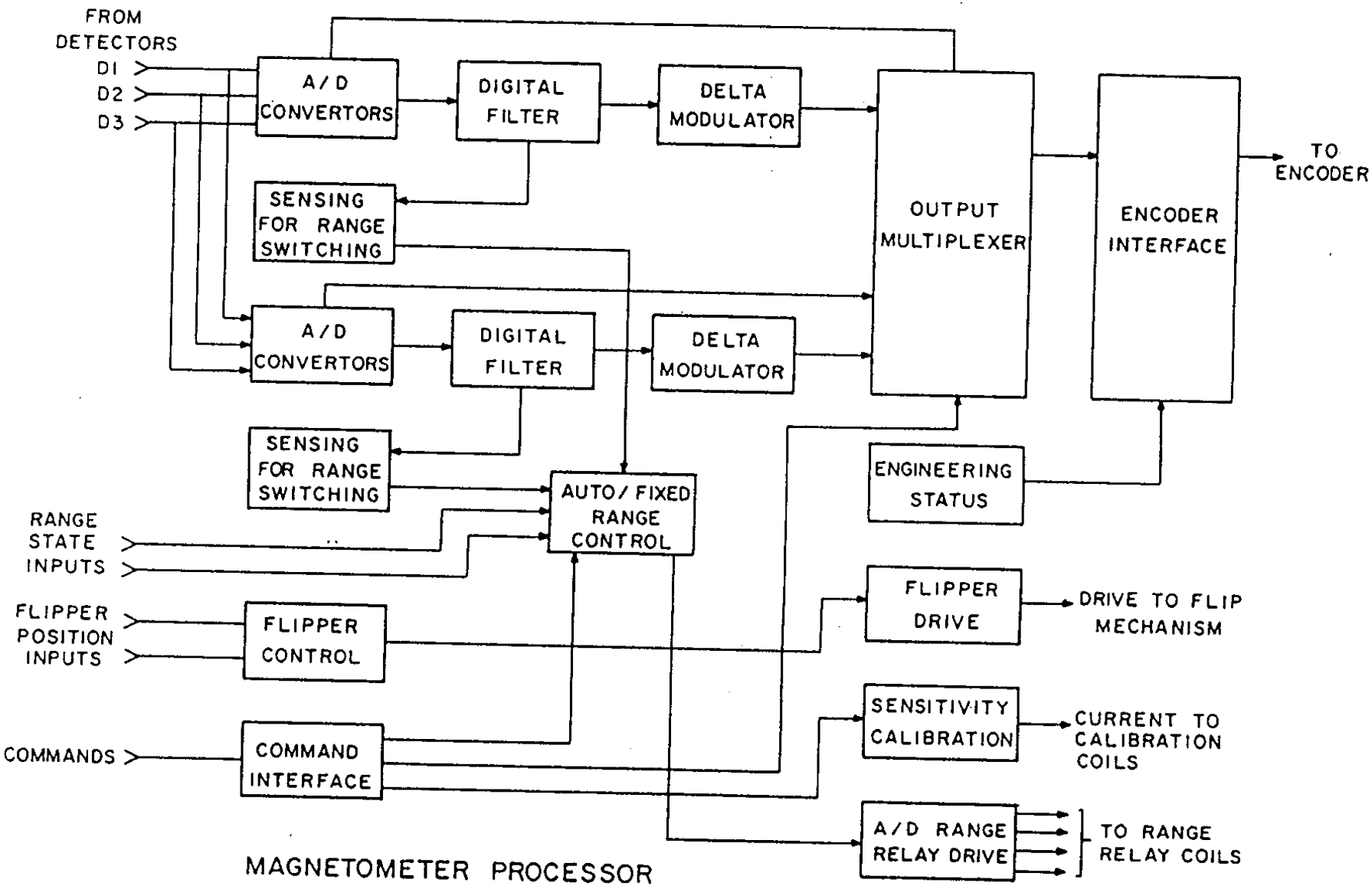


MAGNETOMETER PROCESSOR BLOCK DIAGRAM

FIGURE A-6

# APPENDIX A

The magnetic field experiment on the IMP-8 spacecraft (See Figure A-1) utilizes a tri-axial fluxgate [saturable inductor] magnetometer (see Ness, 1970). See Scearce et al. (1992) for a complete description of the experiment. The instrument originally had three, automatically determined, ranges, ±12 nT, ±36 nT, and ±108 nT, full scale. Because of a range-change circuit failure occurring in early July 1975, the experiment was commanded into a fixed ±36 nT range on July 11 at 1255:09 UT and has been in that range ever since. The measurements are A-to-D converted onboard, to an 8-bit resolution, yielding ±0.14 nT quantization sensitivity, which is larger than the intrinsic sensor noise level of 0.025 nT RMS. The data from the two-bit (per component) adaptive delta modulator, incorporated into the instrument, and applied to the intrinsic sample rate of 25 vectors/s, was never utilized, and hence the rate of the full (8-bit) vector words, which occur every 320 ms, represents the effective sample period of the instrument. The sampling rate is synchronized to the spacecraft clock; the basic spacecraft clock frequency is 6.4 kHz. The sensor unit is mounted on the end of a boom approximately 4 m from the center of the spacecraft.

Figures A-2 and A-3 show pictures of the magnetometer board and data processing unit, respectively, and a list of experiment specifications are provided in Table I. These units are mounted on the instrument shelf of the spacecraft, which is passively thermally controlled to the range of -30°C to 50°C. The sensor unit (on the boom) is also passively thermally controlled, but to a range of -50°C to 50°C. Figure A-4 shows the functional block diagram of the experiment. Originally planned magnetic field science objectives were listed by Ness (1966) and those objectives for the IMP-8 mission, as a whole, appear in a GSFC document entitled "Interplanetary Monitoring Platform, IMP-J."

## TECHNICAL DESCRIPTION OF INSTRUMENT

### FLUXGATE MAGNETOMETER

The fluxgate magnetometer is a tri-axial instrument developed and manufactured by Schonstedt Instrument Company (Figure A-2). All fluxgate magnetometers have in common a ferromagnetic core(s) which is excited by driving, or gating, a magnetic field generated by current in a coil which contains the core. The magnetic flux induced in the core by the gating field is modified by an external magnetic field which generates even

harmonics on the output winding whose amplitude depends on the magnitude of the external field.

The Heliflux sensor is a cross between a parallel and orthogonal gated core; see Schonstedt (1961). When the AC current is applied to the primary winding, the magnetizing field has components both parallel and transverse to the core strips. The entire core is cylindrically saturated by the gating field to minimize the remanent magnetization, or core memory. The secondary winding is wound around the core, perpendicular to the primary winding. Thus, the coupling between the gating field and core output is minimized by the physical orientation of the gating and output windings. (See Schonstedt, 1961, for detailed construction.)

The electronics unit is comprised of a single oscillator-driver, and a preamplifier, phase detector, voltage bias and output driver for each channel (Figure A-5). Since the output channels are the same, only one channel will be discussed. The oscillator generates an AC signal of 24 kHz which is power amplified and fed through the primary windings of the sensors to cyclically drive the magnetic cores of the sensors into saturation. The presence of an external magnetic field along the axis of the sensor results in the generation of even harmonics in the secondary winding of the sensor. The amplitude of the second-harmonic voltage is proportional to the magnitude of the magnetic field and the phase depends upon the direction of the magnetic field when the direction is reversed. The second-harmonic signal is amplified by a tuned amplifier. The tuned pre-amplifier is temperature compensated.

The excitation signal is doubled. This reference signal is then applied to the gate of an FET and it gates the amplified second harmonic signal. The gated signal is integrated to form the DC output. With no signal, the phase detector is set to 2.5 VDC. The DC output is isolated by a DC amplifier.

The sensitivity is controlled by the negative feedback, and the desired range is obtained by changing the feedback elements. The operating range is determined by 2 binary bits generated by two relays. The range is selected by range change commands generated in the Magnetometer Processor; 4 command lines are required (but see page A-1 [top]).

## MAGNETOMETER PROCESSOR

The magnetometer processor in the magnetic field experiment (see Figure A-6) does the following:

1. Analog to Digital (A/D) conversion of the magnetic field signals.
2. Digital filtering of the magnetic field signals.
3. Delta modulation of the magnetic field signals. (This data stream was not used on-ground.)
4. Data multiplexing of the two processing systems, (one redundant), high and low bit rate data, and the combining of the absolute value words and delta modulation 2-bit words into a serial output bit stream.
5. Interfacing with the spacecraft data encoder.
6. Interfacing with the spacecraft for commands.
7. Automatic range switching, sensing, control and range relay drive.
8. Sensitivity calibration control and signal generation.
9. Mechanical flipper control and drive.
10. Monitoring of the engineering status.

The magnetometer processor is housed in a standard spacecraft wedge shaped unit 12-7/8 inches high (see Figure A-3). The processor electrical hardware is primarily low power TTL. The digital filter memory is dynamic MOS, where transistors are used for driving circuits. Monolithic integrated circuit operational amplifiers and field effect transistors are used in the A/D converters.

## ANALOG TO DIGITAL CONVERTERS

Sampling of the data is done every forty milliseconds in synchronism with an encoder furnished signal. The data is stored in a sample-and-hold circuit until the internal timing of the magnetometer processor is ready to commence its sample cycle. All three axes are sampled simultaneously.

The analog to digital conversion is done by a double ramp (RC charge-discharge) A/D converter. The converter works by charging the RC circuit with the voltage to be

measured during a precise time period, discharging the circuit into a negative reference voltage, and then measuring the discharge time with a crystal controlled clock. Most component induced errors are canceled out due to charge and discharge of the same RC components.

There are three sample-and-hold circuits and three A/D converters (one per axis) per system. For the total of two systems there are six sample-and-hold circuits and A/D converters. The three A/D converters per system have been used to provide redundancy so that the system is not lost in the case of a single converter failure.

## SYSTEM REDUNDANCY

Redundancy has been built into the processor and encoder to circumvent failures and/or minimize their impact. There are two main data handling systems (A or B) in the processor. Each system has a digital filter, a delta modulator, range sensing logic, and sets of A/D converters. A double set of encoders has also been provided in the spacecraft, and either of the two processor systems can work with either of the two encoder systems, so that proper operation can occur with any combination of failures of one processor system and/or one encoder system. Three A/D converters per system have been provided, for a total of 6 in the processor, in order to reduce the data loss if one A/D converter is lost.

## RANGE SWITCHING LOGIC

The description of the range switching scheme and supporting electronics is described by Scearce et al., 1992. Since the instrument was commanded into the fixed ±36 nT range, as mentioned above, we do not discuss it further here.

## OUTPUT MULTIPLEXER

The output multiplexer performs three basic functions:

1. Mixing of the X, Y, and Z absolute data words and delta modulation 2-bit words into a serial bit stream.
2. Selection of system A or system B data.
3. Selecting the proper number of samples for high and low bit rates.

All of these functions are performed for both the data, and for the clocks for the data.

TIMING

There are three timing standards for the experiment. Two are derived from crystal controlled clocks and the other is derived from the encoder timing signals. There are two separate and identical crystal controlled timing units, one per system (A or B). The experiment sampling is done in synchronism with a 40 millisecond encoder signal. The internal data processing within the experiment is done in synchronism with the crystal clocks.

Because the memory for the digital filter is dynamic, it is kept running all of the time. After sampling is done and the data stored in a sample-and-hold circuit, processing and A/D conversion of the data are held up until the MOS memory is in the proper position with respect to the processing timing. The data processing sequence is divided into 8 equal time periods and one variable time period. Period 0 is the variable time period between the time when the sample-and-hold takes the data and the time that the MOS memory is in its desired starting state. During periods 1 and 2 the previous sample of X-axis data is processed in the digital filter. In time period 2 the A/D charge takes place. The A/D discharge (for all axes) takes place during time periods 3, 4, 5, and 6. In time period 3 the X-axis data which has been processed by the digital filter is processed by the delta modulator. During time periods 3 and 4 the Y-axis data is processed by the digital filter; this data is also from the previous sample time. In time period 5 the filtered Y-axis data is processed in the delta modulator. In time period 7 the Z-axis data from the previous sample is processed by the delta modulator. In time period 8 of every eighth sample period the Z-axis is separately processed for both high and low bit rates.

## REFERENCES


Interplanetary Monitoring Platform, IMP-J, NASA/GSFC publication.

Mish, W. H., and R. P. Lepping, Magnetic field experiment data processing systems: Explorers 47 and 50, NASA/GSFC, X-694-76-158, August 1976.

Ness, N. F., A proposal for the magnetic field experiment for IMPs H and J, NASA/GSFC, X-612-66-461, September 1966.

Ness, N. F., Magnetometers for space research, Space Sci. Rev., 11, 111-222, 1970.

Scearce, C. S., C. V. Moyer, R. P. Lepping, and N. F. Ness, GSFC magnetic field experiments, Explorers 47 and 50, NASA/GSFC, X-695-76-191, October 1976. Modification in preparation, 1992.

Schonstedt, E. O., Saturable measuring device and magnetic core therefor, U.S. Patent 2916696 (December 1959) and U.S. Patent 2981885 (April 1961).

Smith, B. D., Ulysses spacecraft travels toward sun after completing Jupiter observations, Aviation Week and Space Technology (p. 65), February 17, 1992.

Tsurutani, B., Results for Ulysses' Jupiter flyby, EOS, Transactions of AGU, 73, p. 114, March 17, 1992.

# APPENDIX

## TABLES

I Magnetic Field Experiment Specifications
II IMP-8 Initial Sensitivity Calibration

## FIGURES

A-1 IMP-8 Spacecraft
A-2 Magnetometer electronics unit
A-3 Data processing unit
A-4 IMP-8 magnetic field experiment: block diagram
A-5 Electronics block diagram
A-6 Magnetometer processor: block diagram

## TABLE I

### MAGNETIC FIELD EXPERIMENT SPECIFICATIONS

| | |
|---|---|
| **Weight** | |
| Electronics | 5.5 lb |
| Sensor | 1.25 lb |
| **Power** | |
| Electronics | 5 W |
| Thermally oscillating Actuator (10 min every 46 hours) | 5 W |
| **Thermal Calibration** | |
| Electronics | -40°C to +60°C |
| Sensor | -75°C to +75°C |
| Zero drift/year | ±1 nT |
| Linearity | ±1% |
| Resolution (Sensitivity) | ±0.05 nT |

## TABLE II

### IMP-8 INITIAL SENSITIVITY CALIBRATION

| Range* | Counts/nT | | |
|---|---|---|---|
| | D1 | D2 | D3 |
| ±12 nT | 10.1 | 10.2 | 10.0 |
| ±36 nT | 3.39 | 3.37 | 3.34 |
| ±108 | 0.927 | 0.923 | 0.930 |

*Since July 11, 1975 the instrument has been fixed in the ±36 nT range (see text).

7/18/91 - 12/31/91
D-101582

ASCII LIST OF IMP

FILE 1 RECORD 1 20900 BYTES

91 198.27449 jul 18 12.59 12.56 3.49 -8.07 8.98 -5.26 10.86 99999.00 99999.00 99999.00 99999.00 293.37 45.63 303.53 59.
85 -1.465E+05 -1.506E+05 -1.127E+05 -1.759E+05 -6.651E+04 2.384E+05 5 1 0 0 91 198.27520 jul 18 13.19 13.15 4.67 -7.98 9.35
-5.07 11.20 0.77 0.10 0.53 0.94 300.33 45.33 312.67 58.41 -1.465E+05 -1.506E+05 -1.127E+05 -1.759E+05 -6.651E+
04 2.384E+05 22 1 2 0 91 198.27591 jul 18 13.64 13.58 5.21 -8.65 9.09 -5.76 11.15 1.13 0.52 1.29 1.79 301
.06 42.02 312.11 55.15 -1.465E+05 -1.507E+05 -1.127E+05 -1.760E+05 -6.634E+04 2.384E+05 35 1 0 0 91 198.27662 jul 18 14.47 14.4
3 6.66 -8.60 9.48 -5.61 11.50 1.59 0.16 1.77 2.39 307.73 41.05 319.87 52.87 -1.464E+05 -1.508E+05 -1.126E+
05 -1.762E+05 -6.601E+04 2.384E+05 5 1 2 0 91 198.27734 jul 18 15.43 15.24 6.59 -9.81 9.63 -6.71 12.00 0.79 2.03
1.09 2.43 303.88 39.19 314.49 51.93 -1.464E+05 -1.508E+05 -1.126E+05 -1.762E+05 -6.601E+04 2.384E+05 33 1 0 0 91 198.278
05 jul 18 12.72 12.62 2.20 -8.90 8.67 -6.09 10.83 1.45 0.45 0.38 1.57 283.91 43.42 289.88 59.11 -1.462E+
05 -1.508E+05 -1.126E+05 -1.764E+05 -6.568E+04 2.384E+05 48 1 0 0 91 198.27876 jul 18 12.60 12.56 1.43 -9.53 8.05 -6.88 10
.41 0.78 0.49 0.62 1.11 278.54 39.85 281.76 55.98 -1.462E+05 -1.509E+05 -1.126E+05 -1.765E+05 -6.552E+04 2.384E+
05 48 1 0 0 91 198.27947 jul 18 14.15 14.03 2.67 -10.87 8.47 -8.03 11.20 1.35 1.15 1.06 2.06 283.78 37.13
288.36 52.92 -1.462E+05 -1.509E+05 -1.126E+05 -1.765E+05 -6.552E+04 2.384E+05 48 1 0 0 91 198.28018 jul 18 16.04 15.98 6.29 -1
0.23 10.54 -6.81 13.02 0.71 0.28 0.60 0.97 301.60 41.28 312.74 54.53 -1.461E+05 -1.509E+05 -1.126E+05 -1.766E+
05 -6.535E+04 2.384E+05 37 1 2 0 91 198.28089 jul 18 16.44 16.38 6.32 -10.68 10.70 -7.19 13.30 0.06 0.29 0.54
0.61 300.61 40.76 311.31 54.25 -1.460E+05 -1.510E+05 -1.126E+05 -1.768E+05 -6.503E+04 2.384E+05 34 1 0 0 91 198.28160 jul 18
15.64 15.61 5.82 -10.04 10.44 -6.65 12.87 0.50 0.34 0.34 0.69 300.10 41.98 311.20 55.53 -1.460E+05 -1.511E+
05 -1.126E+05 -1.769E+05 -6.486E+04 2.383E+05 48 1 0 0 91 198.28231 jul 18 16.13 16.02 6.42 -10.45 10.31 -7.07 12.87 0.7
4 0.43 0.30 0.90 301.56 40.07 312.25 53.43 -1.460E+05 -1.511E+05 -1.126E+05 -1.769E+05 -6.486E+04 2.383E+05 48 1 0 0
91 198.28302 jul 18 16.50 16.23 10.09 -8.18 9.73 -5.04 11.67 2.30 2.11 0.32 3.14 320.96 36.83 333.44 45.
97 -1.459E+05 -1.511E+05 -1.126E+05 -1.770E+05 -6.470E+04 2.383E+05 48 1 0 0 91 198.28374 jul 18 15.13 15.07 7.41 -9.06 9.49
-5.95 11.70 1.08 0.60 0.43 1.31 309.26 39.02 321.24 50.91 -1.458E+05 -1.512E+05 -1.125E+05 -1.772E+05 -6.437E+
04 2.383E+05 40 1 0 0 91 198.28445 jul 18 13.75 13.53 5.50 -8.11 9.33 -5.08 11.27 1.99 1.43 0.85 2.60 304
.15 43.61 317.29 56.42 -1.458E+05 -1.513E+05 -1.125E+05 -1.773E+05 -6.421E+04 2.383E+05 27 1 0 0 91 198.28516 jul 18 12.95 12.8
5 3.43 -8.21 9.27 -5.18 11.25 1.09 0.73 0.56 1.43 292.68 46.17 303.54 61.10 -1.458E+05 -1.513E+05 -1.125E+
05 -1.773E+05 -6.421E+04 2.383E+05 43 1 0 0 91 198.28587 jul 18 12.78 12.75 2.40 -8.98 8.72 -6.06 10.95 0.65 0.29
0.72 1.01 284.94 43.17 291.56 59.24 -1.456E+05 -1.514E+05 -1.125E+05 -1.775E+05 -6.389E+04 2.383E+05 20 1 0 0 91 198.286
58 jul 18 11.72 11.67 1.24 -7.95 8.45 -5.15 10.40 0.78 0.64 0.28 1.05 278.87 46.38 283.55 63.00 -1.456E+
05 -1.514E+05 -1.125E+05 -1.775E+05 -6.372E+04 2.383E+05 48 1 0 0 91 198.28729 jul 18 10.77 10.70 0.65 -7.29 7.80 -4.71 9
.59 1.25 0.36 0.32 1.34 275.11 46.83 277.89 63.64 -1.455E+05 -1.515E+05 -1.125E+05 -1.776E+05 -6.356E+04 2.383E+
05 46 1 0 0 91 198.28800 jul 18 11.00 10.90 1.94 -5.68 9.11 -2.76 10.37 1.50 0.11 0.99 1.80 288.85 56.63
305.02 71.97 -1.455E+05 -1.515E+05 -1.125E+05 -1.776E+05 -6.356E+04 2.383E+05 16 1 2 0 91 198.28871 jul 18 10.66 10.56 2.58 -
5.53 8.62 -2.76 9.86 1.06 0.53 1.37 1.81 295.01 54.73 313.02 69.03 -1.454E+05 -1.515E+05 -1.125E+05 -1.778E+
05 -6.324E+04 2.383E+05 12 1 2 0 91 198.28942 jul 18 8.88 8.52 2.78 -5.95 5.44 -4.08 6.95 0.36 0.50 2.44
2.52 295.02 39.66 304.19 54.59 -1.454E+05 -1.515E+05 -1.125E+05 -1.778E+05 -6.324E+04 2.383E+05 48 1 0 0 91 198.29014 jul 18
10.88 10.78 4.23 -6.90 7.12 -4.49 8.84 0.30 0.18 0.57 0.67 301.54 41.37 313.32 55.09 -1.453E+05 -1.516E+
05 -1.125E+05 -1.780E+05 -6.292E+04 2.382E+05 15 1 0 0 91 198.29085 jul 18 13.13 13.04 5.25 -6.68 9.90 -3.46 11.42 1.4
7 0.26 0.57 1.60 308.15 49.37 326.56 61.18 -1.453E+05 -1.517E+05 -1.125E+05 -1.781E+05 -6.275E+04 2.382E+05 38 1 0 0
91 198.29156 jul 18 14.23 13.99 3.42 -8.28 10.74 -4.73 12.71 0.62 1.54 1.57 2.29 292.43 50.16 305.86 65.
34 -1.453E+05 -1.517E+05 -1.125E+05 -1.781E+05 -6.275E+04 2.382E+05 40 1 0 0 91 198.29227 jul 18 12.14 11.79 -5.50 -9.86 3.40
-8.41 6.17 2.08 0.55 2.42 3.23 240.87 16.75 236.83 31.57 -1.451E+05 -1.518E+05 -1.124E+05 -1.783E+05 -6.243E+
04 2.382E+05 30 1 0 0 91 198.29298 jul 18 12.10 12.03 -4.60 -10.78 2.69 -9.49 5.78 0.47 0.82 1.53 1.80 246
.88 12.93 244.13 28.71 -1.451E+05 -1.518E+05 -1.124E+05 -1.784E+05 -6.227E+04 2.382E+05 20 1 0 0 91 198.29369 jul 18 12.62 12.4
9 -2.61 -11.61 3.81 -9.95 7.09 0.74 0.75 1.85 2.13 257.35 17.76 255.32 34.60 -1.450E+05 -1.519E+05 -1.124E+
05 -1.785E+05 -6.211E+04 2.382E+05 25 1 0 0 91 198.29440 jul 18 14.06 14.03 -1.83 -12.87 5.29 -10.70 8.89 0.48 0.24
0.52 0.75 261.89 22.13 260.28 39.33 -1.450E+05 -1.519E+05 -1.124E+05 -1.785E+05 -6.211E+04 2.382E+05 29 1 0 0 91 198.295
11 jul 18 16.83 16.78 2.92 -12.64 10.65 -8.87 13.95 0.68 0.48 0.81 1.16 283.02 39.37 288.24 56.20 -1.449E+
05 -1.520E+05 -1.124E+05 -1.786E+05 -6.179E+04 2.382E+05 35 1 2 0 91 198.29582 jul 18 14.71 14.71 2.48 -11.53 8.79 -8.37 11
.84 99999.00 99999.00 99999.00 99999.00 282.14 36.68 286.52 53.61 -1.449E+05 -1.520E+05 -1.124E+05 -1.787E+05 -6.164E+04 2.382E+
05 4 1 2 0 91 198.29725 jul 18 18.23 18.20 3.48 -12.27 12.99 -7.76 16.09 0.85 0.57 0.07 1.03 285.82 45.52
294.12 62.14 -1.449E+05 -1.520E+05 -1.124E+05 -1.787E+05 -6.164E+04 2.382E+05 11 1 0 2 91 198.29796 jul 18 17.59 17.56 4.90 -1
1.32 12.50 -7.01 15.34 0.27 0.38 0.57 0.74 293.39 45.38 304.95 60.88 -1.447E+05 -1.522E+05 -1.124E+05 -1.791E+
05 -6.100E+04 2.381E+05 31 1 0 0 91 198.29867 jul 18 17.68 17.67 4.58 -11.56 12.55 -7.21 15.47 0.51 0.43 0.42
0.79 291.62 45.26 302.45 61.09 -1.447E+05 -1.522E+05 -1.124E+05 -1.791E+05 -6.100E+04 2.381E+05 35 1 0 0 91 198.30080 jul 18
17.15 17.14 3.89 -11.77 11.84 -7.58 14.87 0.36 0.19 0.09 0.42 288.31 43.69 297.17 60.17 -1.446E+05 -1.522E+

05 -1.123E+05 -1.792E+05 -6.084E+04 2.381E+05 37 1 0 2 91 198.30222 jul 18 15.64 15.59 4.13 -10.33 10.92 -6.50 13.55 0.3
6 2.17 0.19 2.20 291.79 44.45 302.43 60.39 -1.444E+05 -1.524E+05 -1.123E+05 -1.794E+05 -6.037E+04 2.381E+05 12 1 0 2
91 198.30294 jul 18 15.36 15.33 3.84 -11.22 9.71 -7.69 12.70 0.34 0.12 0.40 0.54 288.88 39.33 296.53 55.
92 -1.444E+05 -1.524E+05 -1.123E+05 -1.794E+05 -6.037E+04 2.381E+05 33 1 0 0 91 198.30365 jul 18 16.06 16.00 3.43 -12.33 9.60
-8.76 12.94 1.15 0.36 0.39 1.26 285.53 36.89 291.35 53.97 -1.443E+05 -1.525E+05 -1.123E+05 -1.797E+05 -5.990E+
04 2.381E+05 38 1 0 0 91 198.30436 jul 18 16.06 16.02 4.10 -12.19 9.55 -8.64 12.86 0.79 0.64 0.28 1.06 288
.58 36.59 295.39 53.38 -1.442E+05 -1.526E+05 -1.123E+05 -1.798E+05 -5.975E+04 2.381E+05 34 1 0 0 91 198.30507 jul 18 15.73 15.7
1 4.54 -11.68 9.47 -8.17 12.63 0.52 0.85 0.33 1.05 291.24 37.10 299.06 53.50 -1.441E+05 -1.527E+05 -1.123E+
05 -1.799E+05 -5.944E+04 2.381E+05 48 1 0 0 91 198.30578 jul 18 15.45 15.42 4.58 -11.16 9.60 -7.62 12.59 0.57 0.56
0.52 0.95 292.33 38.52 301.01 54.76 -1.441E+05 -1.527E+05 -1.123E+05 -1.799E+05 -5.944E+04 2.381E+05 42 1 0 0 91 198.306
49 jul 18 12.22 12.20 3.32 -9.60 6.75 -7.02 9.41 1.51 1.63 1.09 2.48 289.07 33.60 295.31 50.47 -1.440E+
05 -1.527E+05 -1.122E+05 -1.800E+05 -5.928E+04 2.380E+05 6 1 2 0 91 198.30720 jul 18 10.01 10.01 4.93 -6.45 5.84 -4.31 7
.57 0.00 0.28 0.00 0.28 307.38 35.75 318.86 49.13 -1.439E+05 -1.528E+05 -1.122E+05 -1.802E+05 -5.897E+04 2.380E+
05 11 1 0 0 91 198.30791 jul 18 11.87 11.82 5.83 -7.06 7.47 -4.37 9.31 1.35 2.00 2.60 3.55 309.52 39.21
323.14 51.96 -1.439E+05 -1.528E+05 -1.122E+05 -1.802E+05 -5.897E+04 2.380E+05 28 1 0 0 91 198.30862 jul 18 15.12 15.07 6.21 -
8.18 11.03 -4.31 13.04 0.35 0.77 0.04 0.84 307.24 47.06 325.28 59.89 -1.438E+05 -1.529E+05 -1.122E+05 -1.803E+
05 -5.866E+04 2.380E+05 8 1 0 0 91 198.30934 jul 18 14.52 14.50 4.84 -9.64 9.69 -6.11 12.23 0.68 0.30 0.67
1.00 296.65 41.94 308.37 57.49 -1.438E+05 -1.529E+05 -1.122E+05 -1.803E+05 -5.866E+04 2.380E+05 23 1 0 0 91 198.31076 jul 18
13.27 13.27 3.94 -9.87 7.94 -6.85 10.65 0.05 0.24 0.55 0.60 291.74 36.78 299.86 53.43 -1.438E+05 -1.529E+
05 -1.122E+05 -1.804E+05 -5.851E+04 2.380E+05 13 1 0 2 91 198.31147 jul 18 12.31 12.30 2.70 -9.64 7.14 -6.89 9.82 0.2
5 0.18 0.18 0.36 285.66 35.51 291.42 53.01 -1.436E+05 -1.531E+05 -1.122E+05 -1.807E+05 -5.805E+04 2.380E+05 19 1 2 0
91 198.31218 jul 18 13.31 13.23 0.66 -11.18 7.04 -8.37 10.22 0.62 1.79 0.62 2.00 273.39 32.15 274.52 50.
61 -1.436E+05 -1.531E+05 -1.122E+05 -1.807E+05 -5.805E+04 2.380E+05 24 1 0 0 91 198.31289 jul 18 11.64 11.63 -0.01 -9.85 6.18
-7.38 8.98 0.57 0.58 0.13 0.82 269.94 32.09 269.91 50.59 -1.435E+05 -1.532E+05 -1.121E+05 -1.808E+05 -5.775E+
04 2.380E+05 8 1 0 0 91 198.31360 jul 18 12.72 12.62 2.29 -10.71 6.27 -8.16 9.35 0.67 0.29 0.48 0.88 282
.08 29.77 285.70 47.83 -1.435E+05 -1.532E+05 -1.121E+05 -1.808E+05 -5.775E+04 2.380E+05 31 1 0 0 91 198.31431 jul 18 14.21 14.1
8 1.24 -11.51 8.19 -8.29 11.44 0.21 0.01 0.44 0.49 276.13 35.29 278.48 53.77 -1.434E+05 -1.533E+05 -1.121E+
05 -1.810E+05 -5.744E+04 2.379E+05 25 1 0 0 91 198.31502 jul 18 11.62 11.61 1.08 -8.71 7.59 -5.83 9.98 0.24 1.22
0.99 1.59 277.05 40.86 280.48 59.28 -1.433E+05 -1.533E+05 -1.121E+05 -1.811E+05 -5.729E+04 2.379E+05 10 1 0 0 91 198.315
74 jul 18 13.62 13.58 1.22 -10.63 8.37 -7.39 11.33 0.51 0.66 0.54 0.99 276.53 38.02 279.36 56.55 -1.433E+
05 -1.533E+05 -1.121E+05 -1.811E+05 -5.729E+04 2.379E+05 30 1 0 0 91 198.31645 jul 18 14.31 14.28 1.04 -10.38 9.75 -6.71 12
.57 0.58 0.52 0.81 1.12 275.73 43.06 278.82 61.62 -1.432E+05 -1.534E+05 -1.121E+05 -1.812E+05 -5.699E+04 2.379E+
05 22 1 0 0 91 198.31716 jul 18 13.95 13.92 1.86 -10.42 9.03 -6.96 11.91 0.77 0.65 0.44 1.10 280.11 40.47
284.95 58.83 -1.432E+05 -1.534E+05 -1.121E+05 -1.812E+05 -5.699E+04 2.379E+05 45 1 0 0 91 198.31787 jul 18 13.96 13.92 1.42 -1
0.29 9.27 -6.75 12.10 0.76 0.23 0.38 0.88 277.87 41.74 281.89 60.30 -1.431E+05 -1.535E+05 -1.121E+05 -1.814E+
05 -5.669E+04 2.379E+05 37 1 0 0 91 198.31858 jul 18 13.51 13.50 0.93 -10.32 8.65 -6.97 11.52 0.19 0.55 0.26
0.63 275.18 39.86 277.64 58.61 -1.431E+05 -1.535E+05 -1.121E+05 -1.815E+05 -5.654E+04 2.379E+05 47 1 0 0 91 198.31929 jul 18
14.30 14.28 1.16 -10.69 9.39 -7.08 12.35 0.60 0.25 0.32 0.73 276.17 41.13 279.28 59.83 -1.430E+05 -1.536E+
05 -1.121E+05 -1.816E+05 -5.639E+04 2.379E+05 21 1 0 0 91 198.32000 jul 18 14.97 14.94 1.37 -11.34 9.62 -7.60 12.78 0.9
3 0.26 0.17 0.98 276.91 40.11 280.24 58.85 -1.430E+05 -1.536E+05 -1.121E+05 -1.816E+05 -5.639E+04 2.379E+05 43 1 0 0
91 198.32071 jul 18 13.65 13.63 1.48 -10.25 8.86 -6.81 11.71 0.33 0.52 0.53 0.81 278.22 40.56 282.27 59.
26 -1.429E+05 -1.537E+05 -1.120E+05 -1.817E+05 -5.610E+04 2.379E+05 48 1 0 0 91 198.32142 jul 18 14.09 14.07 1.70 -10.51 9.20
-6.94 12.12 0.37 0.47 0.49 0.77 279.21 40.84 283.80 59.49 -1.428E+05 -1.537E+05 -1.120E+05 -1.818E+05 -5.595E+
04 2.379E+05 40 1 0 0 91 198.32214 jul 18 13.53 13.51 1.35 -10.32 8.61 -6.95 11.50 0.49 0.60 0.67 1.02 277
.47 39.61 281.01 58.39 -1.428E+05 -1.538E+05 -1.120E+05 -1.819E+05 -5.580E+04 2.379E+05 29 1 0 0 91 198.32285 jul 18 14.32 14.3
1 2.46 -10.22 9.70 -6.49 12.51 0.38 0.09 0.15 0.42 283.54 42.70 290.78 61.00 -1.428E+05 -1.538E+05 -1.120E+
05 -1.819E+05 -5.580E+04 2.379E+05 27 1 0 0 91 198.32356 jul 18 15.38 15.37 2.34 -10.96 10.52 -6.91 13.53 0.52 0.63
0.18 0.84 282.04 43.18 288.69 61.67 -1.427E+05 -1.539E+05 -1.120E+05 -1.820E+05 -5.551E+04 2.378E+05 9 1 0 0 91 198.324
27 jul 18 15.12 15.10 2.86 -10.64 10.33 -6.67 13.25 0.25 0.28 0.51 0.63 285.05 43.15 293.22 61.29 -1.426E+
05 -1.539E+05 -1.120E+05 -1.821E+05 -5.536E+04 2.378E+05 9 1 0 0 91 198.32498 jul 18 14.55 14.54 3.56 -10.09 9.84 -6.29 12
.61 0.12 0.33 0.38 0.52 289.43 42.62 299.51 60.20 -1.426E+05 -1.539E+05 -1.120E+05 -1.821E+05 -5.536E+04 2.378E+
05 12 1 0 0 91 198.32569 jul 18 15.59 15.55 4.33 -10.29 10.83 -6.13 13.62 0.54 0.31 0.68 0.93 292.80 44.14
305.18 61.15 -1.425E+05 -1.540E+05 -1.120E+05 -1.823E+05 -5.507E+04 2.378E+05 24 1 2 0 91 198.32640 jul 18 16.11 16.08 4.88 -1
0.63 11.04 -6.39 13.93 0.71 0.37 0.09 0.81 294.65 43.33 307.36 60.01 -1.424E+05 -1.541E+05 -1.119E+05 -1.824E+
05 -5.478E+04 2.378E+05 13 1 0 0 91 198.32711 jul 18 15.86 15.82 5.83 -10.38 10.42 -6.35 13.27 0.93 0.40 0.48
1.12 299.31 41.18 312.54 56.98 -1.424E+05 -1.541E+05 -1.119E+05 -1.824E+05 -5.478E+04 2.378E+05 44 1 0 0 91 198.32782 jul 18
16.01 15.98 6.83 -10.08 10.35 -6.07 13.11 0.43 0.19 0.59 0.75 304.14 40.36 318.39 55.11 -1.423E+05 -1.541E+
05 -1.119E+05 -1.825E+05 -5.464E+04 2.378E+05 25 1 0 0 91 198.32854 jul 18 16.17 16.14 7.75 -9.78 10.24 -5.83 12.91 0.7
0 0.33 0.37 0.85 308.38 39.37 323.06 53.09 -1.422E+05 -1.542E+05 -1.119E+05 -1.826E+05 -5.435E+04 2.378E+05 43 1 0 0
91 198.32925 jul 18 16.22 16.20 8.03 -9.29 10.55 -5.25 13.05 0.52 0.24 0.13 0.59 310.84 40.67 326.82 53.

65 -1.422E+05 -1.542E+05 -1.119E+05 -1.826E+05 -5.435E+04 2.378E+05 38 1 0 0 91 198.32996 jul 18 16.17 16.14 5.66 -10.00 11.34
-5.65 14.02 0.74 0.49 0.29 0.93 299.48 44.61 315.02 60.30 -1.422E+05 -1.543E+05 -1.119E+05 -1.827E+05 -5.420E+
04 2.378E+05 17 1 0 0 91 198.33067 jul 18 15.23 15.22 5.80 -9.21 10.64 -5.12 13.11 0.41 0.36 0.53 0.76 302
.19 44.37 318.56 59.47 -1.421E+05 -1.543E+05 -1.119E+05 -1.828E+05 -5.406E+04 2.378E+05 7 1 0 0 91 198.33138 jul 18 15.05 14.9
7 6.55 -8.39 10.53 -4.38 12.73 1.17 0.72 0.25 1.40 308.00 44.70 326.24 58.24 -1.420E+05 -1.544E+05 -1.119E+
05 -1.829E+05 -5.378E+04 2.377E+05 22 1 0 0 91 198.33209 jul 18 15.70 15.60 7.82 -9.50 9.60 -5.73 12.23 1.39 0.90
0.84 1.86 309.46 37.98 323.76 51.60 -1.420E+05 -1.544E+05 -1.119E+05 -1.829E+05 -5.378E+04 2.377E+05 18 1 0 0 91 198.332
80 jul 18 13.81 13.79 6.09 -8.65 8.86 -5.16 11.25 0.50 0.10 0.34 0.61 305.15 39.96 319.70 54.65 -1.419E+
05 -1.544E+05 -1.119E+05 -1.830E+05 -5.363E+04 2.377E+05 15 1 0 0 91 198.33351 jul 18 13.85 13.82 5.82 -8.70 9.03 -5.15 11
.43 0.75 0.51 0.13 0.91 303.78 40.80 318.47 55.79 -1.418E+05 -1.545E+05 -1.118E+05 -1.832E+05 -5.335E+04 2.377E+
05 18 1 0 0 91 198.33422 jul 18 13.95 13.91 6.15 -8.70 8.93 -5.19 11.34 0.78 0.52 0.25 0.97 305.26 39.96
319.88 54.64 -1.418E+05 -1.545E+05 -1.118E+05 -1.832E+05 -5.335E+04 2.377E+05 35 1 0 0 91 198.33494 jul 18 14.90 14.88 7.31 -
8.62 9.67 -4.85 12.02 0.45 0.46 0.49 0.80 310.29 40.55 326.46 53.88 -1.418E+05 -1.546E+05 -1.118E+05 -1.832E+
05 -5.321E+04 2.377E+05 34 1 2 0 91 198.33565 jul 18 14.54 14.51 7.05 -8.24 9.63 -4.49 11.86 0.67 0.24 0.52
0.88 310.52 41.61 327.47 54.82 -1.417E+05 -1.547E+05 -1.118E+05 -1.834E+05 -5.293E+04 2.377E+05 39 1 0 0 91 198.33636 jul 18
14.78 14.75 7.30 -7.89 10.11 -4.00 12.18 0.60 0.37 0.22 0.75 312.80 43.23 331.30 55.65 -1.416E+05 -1.547E+
05 -1.118E+05 -1.834E+05 -5.279E+04 2.377E+05 37 1 0 0 91 198.33707 jul 18 15.54 15.48 7.43 -8.37 10.69 -4.24 12.90 1.2
6 0.39 0.59 1.45 311.58 43.67 330.27 56.44 -1.416E+05 -1.547E+05 -1.118E+05 -1.834E+05 -5.279E+04 2.377E+05 27 1 0 0
91 198.33778 jul 18 15.97 15.91 8.53 -8.81 10.13 -4.83 12.53 0.85 0.66 0.43 1.16 314.08 39.56 330.46 51.
95 -1.415E+05 -1.548E+05 -1.118E+05 -1.836E+05 -5.252E+04 2.377E+05 44 1 0 0 91 198.33849 jul 18 16.08 16.06 9.65 -8.57 9.56
-4.80 11.91 0.33 0.43 0.58 0.79 318.41 36.54 333.56 47.85 -1.414E+05 -1.549E+05 -1.118E+05 -1.837E+05 -5.238E+
04 2.377E+05 22 1 0 0 91 198.33920 jul 18 15.30 15.25 8.63 -7.90 9.79 -4.09 11.90 0.68 0.44 0.19 0.84 317
.50 39.91 334.66 51.26 -1.414E+05 -1.549E+05 -1.118E+05 -1.837E+05 -5.238E+04 2.377E+05 32 1 0 0 91 198.33991 jul 18 15.56 15.5
2 8.30 -7.72 10.60 -3.63 12.60 0.23 0.77 0.60 1.00 317.04 43.07 336.35 54.29 -1.413E+05 -1.549E+05 -1.118E+
05 -1.838E+05 -5.210E+04 2.376E+05 30 1 2 0 91 198.34062 jul 18 16.44 16.38 9.19 -9.02 10.13 -5.01 12.60 0.32 0.36
0.34 0.59 315.55 38.19 331.43 50.29 -1.413E+05 -1.550E+05 -1.117E+05 -1.839E+05 -5.197E+04 2.376E+05 19 1 0 0 91 198.341
34 jul 18 16.41 16.35 7.59 -8.04 12.04 -3.43 14.07 0.84 1.11 0.62 1.53 313.35 47.43 335.69 59.37 -1.413E+
05 -1.550E+05 -1.117E+05 -1.839E+05 -5.197E+04 2.376E+05 31 1 0 0 91 198.34205 jul 18 14.95 14.89 7.66 -8.87 9.19 -5.17 11
.68 1.37 0.69 0.39 1.58 310.80 38.09 325.96 51.65 -1.412E+05 -1.550E+05 -1.117E+05 -1.839E+05 -5.183E+04 2.376E+
05 37 1 0 0 91 198.34276 jul 18 15.76 15.71 8.76 -9.03 9.41 -5.24 11.94 1.32 0.97 0.37 1.68 314.13 36.79
329.13 49.48 -1.411E+05 -1.551E+05 -1.117E+05 -1.841E+05 -5.156E+04 2.376E+05 46 1 0 0 91 198.34347 jul 18 12.65 12.53 4.82 -
7.69 8.63 -4.25 10.76 0.41 1.52 1.01 1.87 302.07 43.57 318.61 59.15 -1.410E+05 -1.552E+05 -1.117E+05 -1.841E+
05 -5.142E+04 2.376E+05 39 1 0 0 91 198.34418 jul 18 13.58 13.53 4.84 -9.44 8.39 -5.97 11.13 1.03 0.23 0.56
1.20 297.13 38.34 309.04 55.39 -1.410E+05 -1.552E+05 -1.117E+05 -1.841E+05 -5.142E+04 2.376E+05 48 1 0 0 91 198.34489 jul 18
13.91 13.90 6.13 -7.89 9.66 -4.05 11.79 0.22 0.41 0.43 0.63 307.86 44.05 326.52 58.07 -1.410E+05 -1.552E+
05 -1.117E+05 -1.842E+05 -5.129E+04 2.376E+05 26 1 0 0 91 198.34560 jul 18 13.84 13.80 5.93 -8.25 9.34 -4.50 11.62 0.9
3 0.25 1.06 1.43 305.69 42.59 322.78 57.35 -1.409E+05 -1.553E+05 -1.117E+05 -1.844E+05 -5.102E+04 2.376E+05 40 1 0 0
91 198.34631 jul 18 13.35 13.31 4.99 -8.55 8.90 -4.93 11.31 0.92 0.37 0.74 1.24 300.29 41.97 315.35 58.
19 -1.408E+05 -1.554E+05 -1.117E+05 -1.844E+05 -5.089E+04 2.376E+05 17 1 2 0 91 198.34702 jul 18 14.09 14.04 4.91 -9.40 9.20
-5.62 11.90 0.90 0.17 0.60 1.10 297.57 40.94 311.16 57.91 -1.408E+05 -1.554E+05 -1.117E+05 -1.844E+05 -5.089E+
04 2.376E+05 30 1 0 0 91 198.34774 jul 18 14.52 14.47 5.34 -9.75 9.26 -5.92 12.08 0.57 0.71 0.65 1.12 298
.69 39.79 312.05 56.58 -1.407E+05 -1.554E+05 -1.116E+05 -1.846E+05 -5.062E+04 2.375E+05 16 1 2 0 91 198.34845 jul 18 15.15 15.1
2 5.79 -10.19 9.55 -6.22 12.50 0.46 0.24 0.17 0.55 299.58 39.17 312.92 55.81 -1.407E+05 -1.555E+05 -1.116E+
05 -1.846E+05 -5.049E+04 2.375E+05 41 1 0 0

ASCII LIST OF IMP

FILE 1 RECORD 95 8569 BYTES

91 211.57298 jul 31 6.32 5.90 3.94 -4.23 -1.16 -4.34 0.67 1.16 0.80 0.64 1.55 312.95 -11.32 312.25 6.
51 -7.332E+04 -1.964E+05 -7.545E+04 -2.101E+05 1.147E+04 2.228E+05 25 1 0 0 91 211.57369 jul 31 6.79 6.37 3.73 -4.99 -1.35
-5.10 0.80 0.76 0.83 1.71 2.04 306.83 -12.23 306.19 7.17 -7.319E+04 -1.965E+05 -7.539E+04 -2.102E+05 1.126E+
04 2.228E+05 26 1 0 0 91 211.57440 jul 31 6.23 6.07 3.51 -4.95 -0.17 -4.59 1.86 0.72 0.23 0.79 1.09 305
.34 -1.60 307.40 17.85 -7.312E+04 -1.965E+05 -7.536E+04 -2.102E+05 1.116E+04 2.228E+05 33 1 2 0 91 211.57511 jul 31 6.84 6.5